ORNL/TM-1999/207

OAK RIDGE NATIONAL LABORATORY

LOCKHEED MARTIN

Calculational Benchmark Problems for VVER-1000 Mixed Oxide Fuel Cycle

Margaret B. Emmett

Fissile Materials Disposition Program

MANAGED AND OPERATED BY
LOCKHEED MARTIN ENERGY RESEARCH CORPORATION
FOR THE UNITED STATES
DEPARTMENT OF ENERGY

ORNL-27 (3-96)

This report has been reproduced from the best available copy.

Reports are available to the public from the following source.

National Technical Information Service
5285 Port Royal Road
Springfield, VA 22161
Telephone 703-605-6000 (1-800-553-6847)
TDD 703-487-4639
Fax 703-605-6900
E-mail orders@ntis.fedworld.gov
Web site http://www.ntis.gov/support

Reports are available to U.S. Department of Energy (DOE) employees, DOE contractors, Energy Technology Data Exchange (ETDE) representatives, and International Nuclear Information System (INIS) representatives from the following source.

Office of Scientific and Technical Information
P.O. Box 62
Oak Ridge, TN 37831
Telephone 865-576-8401
Fax 865-576-5728
E-mail reports@adonis.osti.gov
Web site http://www.osti.gov/products/sources.html

Reports produced after January 1, 1996, are generally available via the DOE Information Bridge.

This report was prepared as an account of work sponsored by an agency of the United States government. Neither the United States government nor any agency thereof, nor any of their employees, makes any warranty, express or implied, or assumes any legal liability or responsibility for the accuracy, completeness, or usefulness of any information, apparatus, product, or process disclosed, or represents that its use would not infringe privately owned rights. Reference herein to any specific commercial product, process, or service by trade name, trademark, manufacturer, or otherwise, does not necessarily constitute or imply its endorsement, recommendation, or favoring by the United States government or any agency thereof. The views and opinions of authors expressed herein do not necessarily state or reflect those of the United States government or any agency thereof.

ORNL/TM-1999/207

Computational Physics and Engineering Division (10)

Calculational Benchmark Problems For VVER-1000 Mixed Oxide Fuel Cycle

Margaret B. Emmett

Date Published: March 2000

Prepared by
OAK RIDGE NATIONAL LABORATORY
P.O. Box 2008
Oak Ridge, Tennessee 37831-6285
managed by
LOCKHEED MARTIN ENERGY RESEARCH CORP.
for the
U.S. DEPARTMENT OF ENERGY
under contract DE-AC05-96OR22464

CONTENTS

Page

LIST OF FIGURES v

LIST OF TABLES vii

FOREWORD xi

ABSTRACT xiii

1. INTRODUCTION 1

2. CALCULATIONAL RESULTS FOR TASK I:
CRITICALITY SAFETY STUDY IN STORAGE 3

3. CALCULATIONAL RESULTS FOR TASK IIa AND IIb:
SHIELDING AND HEAT GENERATION STUDY FOR FRESH FUEL 7

4. CALCULATIONAL RESULTS FOR TASK IIc:
SHIELDING AND HEAT GENERATION FOR SPENT FUEL
WITH A CASK 17

5. CONCLUSIONS 23

6. REFERENCES 25

APPENDIX A — DESCRIPTION OF SAFETY ANALYSIS COMPUTATIONAL
BENCHMARK 27
A.1 Introduction 29
A.2 Task I: Criticality Safety Study in Storage 29
A.3 Task II: Shielding and Heat Generation Study with a Cask 30
A.3.1 Task IIa: Study of radioactive characteristics of fresh fuel 30
A.3.2 Task IIb: Shielding and heat generation study of fresh fuel
with a cask 30
A.3.3 Task IIc: Shielding and heat generation study of spent fuel
with a cask 30
A.4 Benchmark Specifications 31
A.4.1 FA Geometry data 31
A.4.2 FA Material Data 33
Fuel. 33
Cladding. 33
Coolant/moderator. 33

A.4.3 Cask Model for Fresh Fuel 34
A.4.4 Cask Model for Spent Fuel 36
A.5 Desired Results 38
A.6 Contacts 38

APPENDIX B — CALCULATION RESULTS FOR TASK I:
CRITICALITY SAFETY STUDY IN STORAGE 39
B.1 The Desired Results 41
B.2 Short Description of the Used Methods 43

APPENDIX C — CALCULATION RESULTS FOR TASKS IIa AND IIb 57
C.1 The Desired Results 59
C.2 Short Description of the Used Methods 59
IPPE-K (A. Kotchetkov, G. Khohlov) 59
IPPE-Z (S. Zabrodskaia, G. Manturov) 60
IPPE-L (V. Levanov) 60
C.3 Comparison of the Calculation Results 61

APPENDIX D — CALCULATION RESULTS FOR TASK IIc: SHIELDING AND HEAT
GENERATION STUDY FOR SPENT FUEL WITH A CASK 77
D.1 The Desired Results 79
D.2 Short Description of the Used Methods 79
IPPE-K (A. Kotchetkov, G. Khohlov, G.Jerdev) 79
IPPE-Z (S. Zabrodskaia , G. Manturov, A.Tsiboulia) 80
IPPE-L (V. Levanov, A.Tsiboulia) 80
D.3 Comparison of the Calculation Results 81

APPENDIX E — RESULTS FOR K_{eff} WITHOUT WATER POOL 89

LIST OF FIGURES

Figure **Page**

2.1. VVER-1000 FA geometry. 4

3.1. Fissile assembly model 12

3.2. Cask for fresh fuel 13

A.1. VVER-1000 FA geometry 32

A.2. FA model 34

A.3. Cask for fresh fuel 35

A.4. Cask geometry of spent FA. 37

B.1. Calculation cell of storage 45

B.2. Pin – cell model 45

B.3. UOX fuel 48

B.4. MOX - W fuel 51

B.5. MOX - R fuel 54

B.6. K-inf average 55

LIST OF TABLES

Table **Page**

2.1. General assembly data 4

2.2. MOX and UOX fresh fuel compositions 5

2.3. K-effective values for fresh fuel for water density study 5

3.1. SAS1 results for UOX fresh fuel single assembly 7

3.2. SAS1 results for MOX-W fresh fuel single assembly 7

3.3. SAS1 results for MOX-R fresh fuel single assembly 8

3.4. Total (alpha-n + spon. fission) neutron source spectrum 9

3.5. Neutron source intensity for fresh fuel 10

3.6. Gamma source spectrum for fresh fuel 11

3.7. Total neutron and gamma source from SAS2 12

3.8. Masses of actinides for a fissile assembly of fresh fuel 12

3.9. Atom composition of cylinder model of FA in the cask for fresh fuel 13

3.10. Atom composition of structure materials in the cask for fresh fuel 14

3.11. SAS2 results for UOX fresh fuel 14

3.12. SAS2 results for MOX-W fresh fuel 14

3.13. SAS2 results for MOX-R fresh fuel 15

3.14. Heat generation for fresh fuel cask 16

4.1. Borated-water composition 17

4.2. Atom composition of structure materials in the cask for spent fuel 18

4.3. SAS2 results for UOX spent fuel 18

4.4. SAS2 results for MOX-W spent fuel 18

4.5. SAS2 results for MOX-R spent fuel 19

4.6. Heat generation for spent fuel cask 20

4.7. Neutron source intensity after 3-year cooling 21

4.8. Total neutron and gamma source from SAS2 21

A.1. General assembly data 31

A.2. MOX and UOX fresh fuel compositions 33

A.3. Borate-water composition 33

A.4. Atom composition of cylinder model of FA in the cask for fresh fuel 34

A.5. Atom composition of structure materials in the cask for fresh fuel 35

A.6. Atom composition of structure materials in the cask for spent fuel 36

B.1. General assembly data 42

B.2. MOX and UOX fresh fuel compositions 42

B.3. K-inf for UOX FUEL 46

B.4. K-inf for UOX fuel 47

B.5. K-inf for MOX-W fuel 49

B.6. Percent difference relative to mean 50

B.7. K-inf for MOX-R fuel 52

B.8. Percent difference relative to mean 53

C.1. UO2 - Comparison of dose rates [mSv/h] calculated by different methods 61

C.2. MOX WEAPON - Comparison of dose rates [mSv/h] calculated by different methods . 62

C.3. MOX REACTOR - Comparison of dose rates [mSv/h] calculated by different methods 63

C.4. Heat generation at fresh FA: UO_2 (Wt) 64

C.5. Heat generation at fresh FA: MOX-W (4.2%) (Wt) 64

C.6. Heat generation at fresh FA: MOX-R (6.1%) (Wt) 65

C.7. Comparison of main radioactive characteristics: $T_{1/2}$ (year) 66

C.8. Comparison of main radioactive characteristics: Decay energy (MeV) and number of α-particles per decay 67

C.9. Comparison of main radioactive characteristics: yield of reaction (α-n) at UO_2 (1/decay) 68

C.10. Comparison of main radioactive characteristics: spontaneous fission (1/decay) 69

C.11. Masses of actinides at 1 FA of fresh fuel UO_2 (g) 70

C.12. Masses of actinides at 1 FA of fresh fuel MOX-W (4.2%) (g) 70

C.13. Masses of actinides at 1 FA of fresh fuel MOX-R (6.1%) (g) 71

C.14. Neutron source strength at 1 FA of fresh fuel UO_2 (n/s) 71

C.15. Neutron source strength at 1 FA of fresh fuel MOX-W (4.2%) (n/s) 72

C.16. Neutron source strength at 1 FA of fresh fuel MOX-R (6.1%) (n/s) 72

C.17. Neutron source spectrum normalized to 1 and total intensity at 1 FA calculated by IPPE-Z using ORIGEN (n/s) 73

C.18. Gamma source spectrum normalized to 1 and total intensity at 1 FA calculated by IPPE-Z (photons/s) 73

C.19. Neutron source spectrum normalized to 1 and total intensity at 1 FA calculated by IPPE-K using CARE (n/s) 74

C.20. Gamma source spectrum normalized to 1 and total intensity at 1 FA calculated by IPPE-K for storage time t=0 (photons/s) 75

C.21. Gamma source spectrum normalized to 1 and total intensity at 1 FA calculated by IPPE-K for storage time t=10 years (photons/s) 75

D.1. UO_2 - Comparison of dose rates [mSv/h] calculated by different methods 81

D.2. MOX WEAPON - Comparison of dose rates [mSv/h] calculated by different methods . 82

D.3. MOX REACTOR - Comparison of dose rates [mSv/h] calculated by different methods 83

D.4. The masses of actinides in one irradiated FA(g) after 3 years cooling time UOX 84

D.5. The masses of actinides in one irradiated FA(g) after 3 years cooling time MOX (weapon) 85

D.6. The masses of actinides in one irradiated FA(g) after 3 years cooling time MOX (reactor) 86

D.7. Heat generation via cooling time for 1 irradiated FA, Wt 87

FOREWORD

This document fulfils milestone 10.2.2.2e in the Fissile Materials Disposition Program Annual Operations Plan for 1999. This report contains the final computational results for the United States. The Russian results which are provided in this report are for the convenience of the reader and are not official documentation.

Calculational Benchmark Problems for VVER-1000 Mixed Oxide Fuel Cycle

Margaret B. Emmett

ABSTRACT

Standard problems were created to test the ability of American and Russian computational methods and data regarding the analysis of the storage and handling of Russian pressurized water reactor (VVER) mixed oxide fuel. Criticality safety and radiation shielding problems were analyzed. Analysis of American and Russian multiplication factors for fresh fuel storage for low-enriched uranium (UOX), weapons- (MOX-W) and reactor-grade (MOX-R) MOX differ by less than 2% for all variations of water density. For shielding calculations for fresh fuel, the ORNL results for the neutron source differ from the Russian results by less than 1% for UOX and MOX-R and by approximately 3% for MOX-W. For shielding calculations for fresh fuel assemblies, neutron dose rates at the surface of the assemblies differ from the Russian results by 5% to 9%; the level of agreement for gamma dose varies depending on the type of fuel, with UOX differing by the largest amount. The use of different gamma group structures and instantaneous versus asymptotic decay assumptions also complicate the comparison. For the calculation of dose rates from spent fuel in a shipping cask, the neutron source for UOX after 3-year cooling is within 1% and for MOX-W within 5% of one of the Russian results while the MOX-R difference is the largest at over 10%. These studies are a portion of the documentation required by the Russian nuclear regulatory authority, GAN, in order to certify Russian programs and data as being acceptably accurate for the analysis of mixed oxide fuels.

1. INTRODUCTION

A goal of the Fissile Materials Disposition Program is to irradiate Russian, weapons-usable plutonium in Russian pressurized water reactors (VVERs). The fuel cycle which must be developed to support the irradiations services will include fresh fuel shipment to the reactor sites, fresh fuel storage at the reactor sites and transportation of spent, mixed oxide (MOX) fuel from the reactors to ultimate disposal. Assessment of the nuclear safety of these procedures will likely require the use of computational methods. The calculation of computational benchmarks (standard problems) is an accepted method of verifying computational methods.

Specifications were provided jointly by the Russian and American participants in the Fissile Materials Disposition Program (FMDP) for a calculational benchmark problem set for fissile material disposition with a VVER-type reactor. Appendix A contains the specifications. The study used the following fuels: mixed oxide (MOX) with weapons-grade plutonium, MOX consisting of civil plutonium fuel (reactor-grade) and the traditional uranium dioxide (UOX) low enriched fuel. Task I was a study of criticality safety in fresh fuel storage for the three types of fuel. Task II is a three-part task studying the shielding and radioactive characteristics when the fissile assembly is transported. Task IIa is a study of the radioactive characteristics of a fissile assembly of fresh fuel without a container. Task IIb is a study of a fissile assembly of fresh fuel within a cask. Task IIc is a study of a fissile assembly with a spent fuel cask. The cask model is typical of those used to transport fissile assemblies of spent fuel. Appendices B-D contain Russian computational results for these Tasks.

2. CALCULATIONAL RESULTS FOR TASK I: CRITICALITY SAFETY STUDY IN STORAGE

Task I was a study of criticality safety in fresh fuel storage for three types of fuel. The geometry specifications for the fissile assembly are given in Table 2.1. The model was typical of a VVER-1000 in an assembly lattice of 312 fuel pins with 18 control rod guide tubes, and a central instrumentation channel. The pool storage model is an infinite lattice with a pitch of 40 cm. Figure 2.1 illustrates the geometry with reflected boundaries on the 6 outermost surfaces. Table 2.2 contains the fresh fuel compositions of the UOX and MOX in units of atoms/barn-cm. The cladding is a Zirconium composition with an atom density 0.0423 atoms/barn-cm. This calculation is a parameter study of the change in k_{eff} due to changes in the water density. The infinite pool storage calculation contains variable density water at T = 300K. The H_2O densities, γ (H_2O), were 1.0, 0.9, 0.8, 0.7, 0.6, 0.5, 0.4, 0.3, 0.2, 0.1, 0.05, 0.03, 0.02, and 0 (g/cm^3), where for $\gamma(H_2O)$ = 1 g/cm^3, the densities in atoms/(barn-cm) are H = .06694 and O = 0.03347. The cross-section library used was the SCALE[1] 238-group library based on ENDF/B-V. The assembly was modeled in KENO-VI geometry, using mirror reflection as the boundary condition. The results are given in Table 2.3. As the moderator density approaches unity, the single-unit k_{eff} is approached; e.g., for UOX the single-unit k_{eff} was calculated to be 0.8858. In other words, for $\gamma(H_2O)$ = 1 down to $\gamma(H_2O)$ = 0.7, the assembly acts like a single unit because there is enough water in the system to isolate the assemblies from each other. The reactivity decreases up to the point where the assemblies are no longer isolated; and then, it increases until optimal moderation is reached. At that point (approximately 0.1 g/cm^3), the k_{eff} starts to drop off because the assemblies are undermoderated. All cases were run using KENO-VI from the SCALE system for a total of 500,000 particles. The SCALE4.3R version of CSAS6 which processes the cross-section data and executes KENO-VI was used. Appendix E has some additional comments on calculation of the k_{eff} for the dry case.

Table 2.1. General assembly data

Parameter	Value
Fuel pins	
Number of fuel pins	312
Number of guide tubes	18
Number of instrumentation tubes	1
Pin pitch, cm	1.275
Fuel rods	
Pellet diameter, cm	0.772
Clad inside diameter, cm	0.772
Clad outside diameter, cm	0.910
Clad material	Zr
Active fuel length, cm	353.0
Guide tubes	
Inside diameter, cm	1.090
Outside diameter, cm	1.265
Material	Zr
Central instrumentation tube	
Inside diameter, cm	0.960
Outside diameter, cm	1.125
Material	Zr

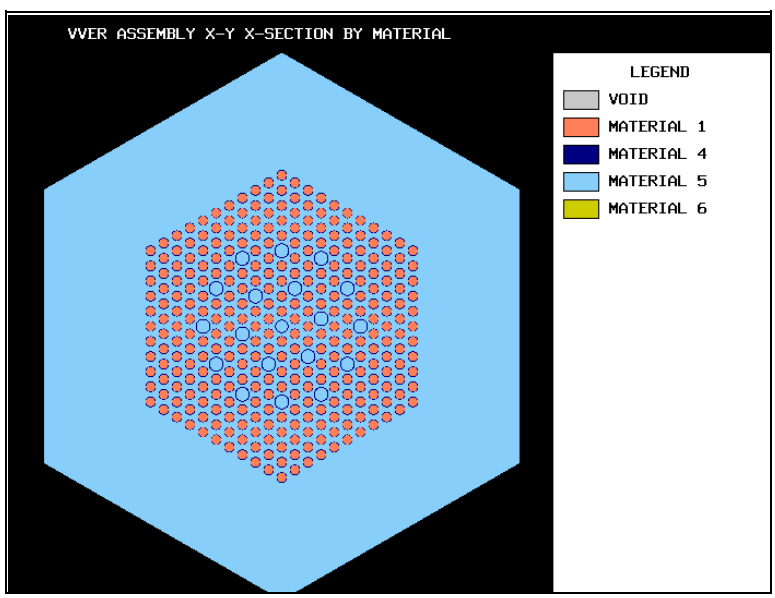

Fig. 2.1. VVER-1000 FA geometry.

Table 2.2. MOX and UOX fresh fuel compositions [atoms/(b cm)]

Nuclides	MOX-W (4.2%)	MOX-R (6.1%)	UOX (4.4%)
^{16}O	4.3036×10^{-2}	4.3051×10^{-2}	3.9235×10^{-2}
^{234}U	$<2.0 \times 10^{-7}$	$<2.0 \times 10^{-7}$	8.0×10^{-6}
^{235}U	4.1762×10^{-5}	4.0964×10^{-5}	8.7370×10^{-4}
^{238}U	2.0576×10^{-2}	2.0183×10^{-5}	1.8744×10^{-2}
^{236}Pu	$<1.0 \times 10^{-12}$	$<1.0 \times 10^{-10}$	
^{238}Pu	1.8089×10^{-7}	1.9720×10^{-5}	
^{239}Pu	8.4610×10^{-4}	7.5671×10^{-4}	
^{240}Pu	5.2111×10^{-5}	3.1941×10^{-4}	
^{241}Pu	1.6078×10^{-6}	1.2464×10^{-4}	
^{242}Pu	2.6685×10^{-7}	6.8527×10^{-5}	
^{241}Am	1.7864×10^{-7}	1.6878×10^{-5}	

Table 2.3. K-effective values for fresh fuel for water density study

H_2O Density g/cc	Hydrogen (atoms/b-cm)	Oxygen (atoms/b-cm)	UO_2	MOX-W	MOX-R
1.0	6.6940×10^{-2}	3.3470×10^{-2}	0.9254	0.9195	0.8330
0.9	6.0246×10^{-2}	3.0123×10^{-2}	0.9031	0.8984	0.8125
0.8	5.3552×10^{-2}	2.6776×10^{-2}	0.8853	0.8798	0.8004
0.7	4.6858×10^{-2}	2.3429×10^{-2}	0.8795	0.8787	0.8011
0.6	4.0164×10^{-2}	2.0082×10^{-2}	0.8916	0.8949	0.8176
0.5	3.3470×10^{-2}	1.6735×10^{-2}	0.9325	0.9373	0.8608
0.4	2.6776×10^{-2}	1.3388×10^{-2}	1.014	1.020	0.9404
0.3	2.0082×10^{-2}	1.0041×10^{-2}	1.135	1.139	1.051
0.2	1.3388×10^{-2}	6.6940×10^{-3}	1.269	1.258	1.158
0.1	6.6940×10^{-3}	3.3470×10^{-3}	1.287	1.238	1.136
0.05	3.3470×10^{-3}	1.6735×10^{-3}	1.098	1.042	0.9710
0.03	2.0082×10^{-3}	1.0041×10^{-3}	0.9130	0.8774	0.8460
0.02	1.3388×10^{-3}	6.6940×10^{-4}	0.7830	0.7714	0.7689
0 (dry)	0	0	0.4594	0.5244	0.5707

*All results are from SCALE 4.3R version of KENO-VI for 250 generations of 2000 particles using the 238 Group Library.

3. CALCULATIONAL RESULTS FOR TASK IIa AND IIb: SHIELDING AND HEAT GENERATION STUDY FOR FRESH FUEL

Task IIa is a study of the radioactive characteristics of fresh fuel in a fissile assembly without a container (cask). A dry assembly of fresh fuel with geometry specifications from Table 2.1 and fresh fuel compositions from Table 2.2 was used. The temperature of the fissile assembly was 300 K.

For Task IIa, calculations of the dose rates at the surface of the assembly and at 0.5, 1, and 2 meters from this surface were calculated using the one-dimensional SCALE module SAS1. The dose rate and flux results for all three types of fuel are given in Tables 3.1–3.3.

Table 3.1. SAS1 results for UOX fresh fuel single assembly

Detector	Neutron		Gamma	
	Flux ($n/cm^2/sec$)	Dose (rem/hr)	Flux ($photons/cm^2/sec$)	Dose (rem/hr)
At surface	3.735×10^{-1}	4.252×10^{-5}	5.184×10^{2}	2.233×10^{-4}
0.5 m from surface	5.328×10^{-2}	6.064×10^{-6}	7.294×10^{1}	3.124×10^{-5}
1 m from surface	2.649×10^{-2}	3.008×10^{-6}	3.723×10^{1}	1.592×10^{-5}
2 m from surface	1.047×10^{-2}	1.185×10^{-6}	1.530×10^{1}	6.533×10^{-6}

Table 3.2. SAS1 results for MOX-W fresh fuel single assembly

Detector	Neutron		Gamma	
	Flux ($n/cm^2/sec$)	Dose (rem/hr)	Flux ($photons/cm^2/sec$)	Dose (rem/hr)
At surface	1.393×10^{2}	1.602×10^{-2}	1.552×10^{4}	1.115×10^{-2}
0.5 m from surface	1.989×10^{1}	2.286×10^{-3}	2.217×10^{3}	1.522×10^{-3}
1 m from surface	9.895×10^{0}	1.135×10^{-3}	1.144×10^{3}	7.725×10^{-4}
2 m from surface	3.917×10^{0}	4.479×10^{-4}	4.815×10^{2}	3.173×10^{-4}

Table 3.3. SAS1 results for MOX-R fresh fuel single assembly

Detector	Neutron		Gamma	
	Flux ($n/cm^2/sec$)	Dose (rem/hr)	Flux ($photons/cm^2/sec$)	Dose (rem/hr)
At surface	1.278×10^{3}	1.470×10^{-1}	4.321×10^{5}	1.304×10^{-1}
0.5 m from surface	1.825×10^{2}	2.097×10^{-2}	7.134×10^{4}	2.106×10^{-2}
1 m from surface	9.081×10^{1}	1.041×10^{-2}	3.839×10^{4}	1.126×10^{-2}
2 m from surface	3.595×10^{1}	4.109×10^{-3}	1.719×10^{4}	4.998×10^{-3}

The neutron and gamma source strengths were calculated using the SAS2 code sequence. Table 3.4 gives the total neutron source spectra in the SCALE 27 neutron-group structure for a single assembly for each of the three fuel types. The neutron source intensity by separate isotope is given in Table 3.5. The gamma source spectra is contained in Table 3.6 in the 18-gamma-group structure from the SCALE 27n-18 gamma-group library. This library is based on data from the Evaluated Nuclear Data File/B, Version IV (ENDF/B-IV). In order to make it easier to compare the data, the total neutron and gamma sources for UOX, MOX-R and MOX-W are presented in Table 3.7.

For the purpose of confirming the SAS2 results, an additional calculation was done using the PC code ORIGEN-ARP.[2] The results were comparable. In order to use ORIGEN-ARP, the masses of the nuclides in the three types of fuel were calculated and used as input; Table 3.8 contains the calculated masses. In each case, all sources were generated corresponding to minimal decay; therefore, no equilibrium assumptions were made for daughter products.

Table 3.4. Total (alpha-n + spon. fission) neutron source spectrum

		Neutrons/sec		
	Boundaries, MeV	UOX	MOX-R	MOX-W
1	6.43×10^{0} – 2.00×10^{1}	9.746×10^{1}	1.948×10^{5}	2.135×10^{4}
2	3.00×10^{0} – 6.43×10^{0}	1.225×10^{3}	3.850×10^{6}	4.243×10^{5}
3	1.85×10^{0} – 3.00×10^{0}	1.462×10^{3}	7.106×10^{6}	7.856×10^{5}
4	1.40×10^{0} – 1.85×10^{0}	7.496×10^{2}	2.633×10^{6}	2.903×10^{5}
5	9.00×10^{-1} – 1.40×10^{0}	9.662×10^{2}	2.574×10^{6}	2.830×10^{5}
6	4.00×10^{-1} – 9.00×10^{-1}	1.029×10^{3}	2.244×10^{6}	2.461×10^{5}
7	1.00×10^{-1} – 4.00×10^{-1}	2.012×10^{2}	4.311×10^{5}	4.728×10^{4}
8	1.70×10^{-2} – 1.00×10^{-1}	0.0	0.0	0.0
9	3.00×10^{-3} – 1.70×10^{-2}	0.0	0.0	0.0
10	5.50×10^{-4} – 3.00×10^{-3}	0.0	0.0	0.0
11	1.00×10^{-4} – 5.50×10^{-4}	0.0	0.0	0.0
12	3.00×10^{-5} – 1.00×10^{-4}	0.0	0.0	0.0
13	1.00×10^{-5} – 3.00×10^{-5}	0.0	0.0	0.0
14	3.05×10^{-6} – 1.00×10^{-5}	0.0	0.0	0.0
15	1.77×10^{-6} – 3.05×10^{-6}	0.0	0.0	0.0
16	1.30×10^{-6} – 1.77×10^{-6}	0.0	0.0	0.0
17	1.13×10^{-6} – 1.30×10^{-6}	0.0	0.0	0.0
18	1.00×10^{-6} – 1.13×10^{-6}	0.0	0.0	0.0
19	8.00×10^{-7} – 1.00×10^{-6}	0.0	0.0	0.0
20	4.00×10^{-7} – 8.00×10^{-7}	0.0	0.0	0.0
21	3.25×10^{-7} – 4.00×10^{-7}	0.0	0.0	0.0
22	2.25×10^{-7} – 3.25×10^{-7}	0.0	0.0	0.0
23	1.00×10^{-7} – 2.25×10^{-7}	0.0	0.0	0.0
24	5.00×10^{-8} – 1.00×10^{-7}	0.0	0.0	0.0
25	3.00×10^{-8} – 5.00×10^{-8}	0.0	0.0	0.0
26	1.00×10^{-8} – 3.00×10^{-8}	0.0	0.0	0.0
27	1.00×10^{-11} – 1.00×10^{-8}	0.0	0.0	0.0
		5.730×10^{3}	1.903×10^{7}	2.098×10^{6}

Table 3.5. Neutron source intensity for fresh fuel

	neutrons/sec		
Nuclide	MOX-R	MOX-W	UOX
^{234}U	1.25×10^{1}	1.25×10^{1}	5.02×10^{2}
^{235}U	6.66×10^{-1}	6.78×10^{-1}	1.42×10^{1}
^{238}U	5.61×10^{3}	5.72×10^{3}	5.22×10^{3}
^{236}Pu	1.21×10^{3}	1.21×10^{1}	
^{238}Pu	7.07×10^{6}	6.48×10^{4}	
^{239}Pu	6.54×10^{5}	7.31×10^{5}	
^{240}Pu	7.81×10^{6}	1.28×10^{6}	
^{241}Pu	3.66×10^{3}	4.71×10^{1}	
^{242}Pu	2.45×10^{6}	9.55×10^{3}	
^{241}Am	1.03×10^{6}	1.09×10^{4}	
Total	1.90×10^{7}	2.10×10^{6}	5.73×10^{3}

Task IIb entitled 'Shielding and Heat Generation Study of Fresh Fuel with a Cask' was a study of a cask model typical of those used to transport fissile assemblies of fresh fuel. The cross-section libraries used were the 27-group burnup library (based on ENDF/B-IV) and the 27 neutron, 18-gamma-group library. The fissile assembly (FA) model for fresh fuel is shown in Figure 3.1, and the homogeneous fissile assembly compositions are given in Table 3.9. The model of the cask for fresh fuel is illustrated in Figure 3.2. The atom composition of the structural materials in the cask is given in Table 3.10. Dose rates at the surface of the cask and at 0.5, 1 and 2 meters from the surface were calculated using the SAS2 module of SCALE 4.3R. All three types of fuel were evaluated. The dose rate results are presented in Tables 3.11–3.13. Although the total sources for MOX-W and MOX-R are about an order of magnitude different, the gamma dose rates for MOX-R are higher by approximately a factor of 3, and the neutron dose rates are higher by approximately a factor of 9. A cursory inspection of the gamma sources in Table 3.6 indicates some groupwise sources differ by up to a factor of 20, while others are nearly the same. These differences are indicative of isotopic differences, but specific scenarios were not analyzed.

In addition to calculating dose rates, a heat generation study for the fresh fuel cask was done using the SAS2 module from SCALE 4.3R with post processing by ORIGEN. The results for the various actinides are presented in Table 3.14.

Table 3.6. Gamma source spectrum for fresh fuel

	UOX		MOX-R		MOX-W	
Energy interval in MeV	photons / sec	mev / sec	photons / sec	mev / sec	photons / sec	mev / sec
1.0000×10^{-2} to 5.0000×10^{-2}	2.1328×10^{9}	6.3984×10^{7}	2.1379×10^{13}	6.4137×10^{11}	1.3852×10^{12}	4.1555×10^{10}
5.0000×10^{-2} to 1.0000×10^{-1}	1.5640×10^{8}	1.1730×10^{7}	1.2641×10^{13}	9.4807×10^{11}	1.4063×10^{11}	1.0547×10^{10}
1.0000×10^{-1} to 2.0000×10^{-1}	1.2326×10^{9}	1.8489×10^{8}	2.3288×10^{10}	3.4932×10^{9}	3.9189×10^{9}	5.8784×10^{8}
2.0000×10^{-1} to 3.0000×10^{-1}	6.5511×10^{7}	1.6378×10^{7}	6.9238×10^{8}	1.7309×10^{8}	2.8270×10^{8}	7.0674×10^{7}
3.0000×10^{-1} to 4.0000×10^{-1}	1.9528×10^{6}	6.8348×10^{5}	2.2881×10^{9}	8.0082×10^{8}	1.9354×10^{9}	6.7738×10^{8}
4.0000×10^{-1} to 6.0000×10^{-1}	1.7470×10^{5}	8.7348×10^{4}	6.3942×10^{8}	3.1971×10^{8}	6.3055×10^{8}	3.1528×10^{8}
6.0000×10^{-1} to 8.0000×10^{-1}	2.4208×10^{4}	1.6946×10^{4}	5.0810×10^{8}	3.5567×10^{8}	4.2056×10^{7}	2.9439×10^{7}
8.0000×10^{-1} to 1.0000×10^{0}	3.7240×10^{3}	3.3516×10^{3}	2.0225×10^{7}	1.8202×10^{7}	5.9349×10^{5}	5.3414×10^{5}
1.0000×10^{0} to 1.3300×10^{0}	5.0684×10^{3}	5.9047×10^{3}	1.2229×10^{7}	1.4247×10^{7}	1.0921×10^{6}	1.2723×10^{6}
1.3300×10^{0} to 1.6600×10^{0}	2.8316×10^{-22}	4.2333×10^{-22}	1.4498×10^{-22}	2.1675×10^{-22}	1.4533×10^{-22}	2.1727×10^{-22}
1.6600×10^{0} to 2.0000×10^{0}	2.2097×10^{3}	4.0437×10^{3}	4.2720×10^{6}	7.8177×10^{6}	4.5942×10^{5}	8.4074×10^{5}
2.0000×10^{0} to 2.5000×10^{0}	1.3366×10^{3}	3.0074×10^{3}	2.5613×10^{6}	5.7629×10^{6}	2.7473×10^{5}	6.1814×10^{5}
2.5000×10^{0} to 3.0000×10^{0}	7.7344×10^{2}	2.1270×10^{3}	1.4706×10^{6}	4.0442×10^{6}	1.5738×10^{5}	4.3279×10^{5}
3.0000×10^{0} to 4.0000×10^{0}	6.9336×10^{2}	2.4267×10^{3}	1.3063×10^{6}	4.5721×10^{6}	1.3941×10^{5}	4.8793×10^{5}
4.0000×10^{0} to 5.0000×10^{0}	2.3348×10^{2}	1.0507×10^{3}	4.3528×10^{5}	1.9588×10^{6}	4.6304×10^{4}	2.0837×10^{5}
5.0000×10^{0} to 6.5000×10^{0}	9.3505×10^{1}	5.3766×10^{2}	1.7276×10^{5}	9.9338×10^{5}	1.8327×10^{4}	1.0538×10^{5}
6.5000×10^{0} to 8.0000×10^{0}	1.8308×10^{1}	1.3273×10^{2}	3.3551×10^{4}	2.4325×10^{5}	3.5502×10^{3}	2.5739×10^{4}
8.0000×10^{0} to 1.0000×10^{1}	3.8821×10^{0}	3.4939×10^{1}	7.0745×10^{3}	6.3670×10^{4}	7.4725×10^{2}	6.7253×10^{3}
Totals	3.5895×10^{9}	2.7780×10^{8}	3.4047×10^{13}	1.5946×10^{12}	1.5326×10^{12}	5.3788×10^{10}

Table 3.7. Total neutron and gamma source from SAS2

Source spectra for fresh fuel			
Particle Type	UOX	MOX-W	MOX-R
Neutron (n/sec)	5.73×10^{3}	2.10×10^{6}	1.90×10^{7}
Gammas (MeV/sec)	2.78×10^{8}	5.38×10^{10}	1.59×10^{12}

Table 3.8. Masses of actinides for a fissile assembly of fresh fuel

Nuclide	MOX-R Grams	MOX-W Grams	UOX Grams
^{16}O	5.90×10^{4}	5.90×10^{4}	5.38×10^{4}
^{234}U	4.08×10^{0}	4.08×10^{0}	1.63×10^{2}
^{235}U	8.35×10^{2}	8.51×10^{2}	1.78×10^{4}
^{238}U	4.11×10^{5}	4.19×10^{5}	3.82×10^{5}
^{236}Pu	2.09×10^{-3}	2.09×10^{-5}	
^{238}Pu	4.12×10^{2}	3.78×10^{0}	
^{239}Pu	1.58×10^{4}	1.77×10^{4}	
^{240}Pu	6.67×10^{3}	1.09×10^{3}	
^{241}Pu	2.61×10^{3}	3.36×10^{1}	
^{242}Pu	1.43×10^{3}	5.58×10^{0}	
^{241}Am	3.51×10^{2}	3.72×10^{0}	

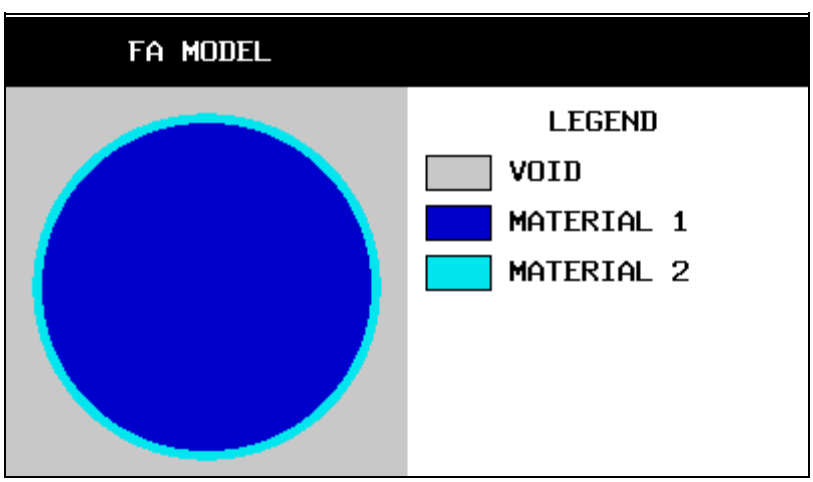

Fig. 3.1. Fissile assembly model.

Table 3.9. Atom composition of cylinder model of FA in the cask for fresh fuel [atoms/(b cm)]

Zone	Material 1			Material 2
Material	MOX-W (4.2%)	MOX-R (6.1%)	UOX (4.4%)	Zr
R, cm	12.3	12.3	12.3	12.37
Zr	0.004834	0.004834	0.004834	0.04230
^{16}O	1.3224×10^{-2}	1.3228×10^{-2}	1.2056×10^{-2}	
^{234}U	$<6.0 \times 10^{-8}$	$<6.0 \times 10^{-8}$	2.5×10^{-6}	
^{235}U	1.2832×10^{-5}	1.2587×10^{-5}	2.6846×10^{-4}	
^{238}U	6.3224×10^{-3}	6.2016×10^{-3}	5.7595×10^{-3}	
^{236}Pu	$<3.0 \times 10^{-13}$	$<3.0 \times 10^{-11}$		
^{238}Pu	5.5582×10^{-8}	6.0594×10^{-6}		
^{239}Pu	2.5998×10^{-4}	2.3251×10^{-4}		
^{240}Pu	1.6012×10^{-5}	9.8145×10^{-5}		
^{241}Pu	4.9403×10^{-7}	3.8298×10^{-5}		
^{242}Pu	8.1995×10^{-8}	2.1056×10^{-5}		
^{241}Am	5.4891×10^{-8}	5.1861×10^{-6}		

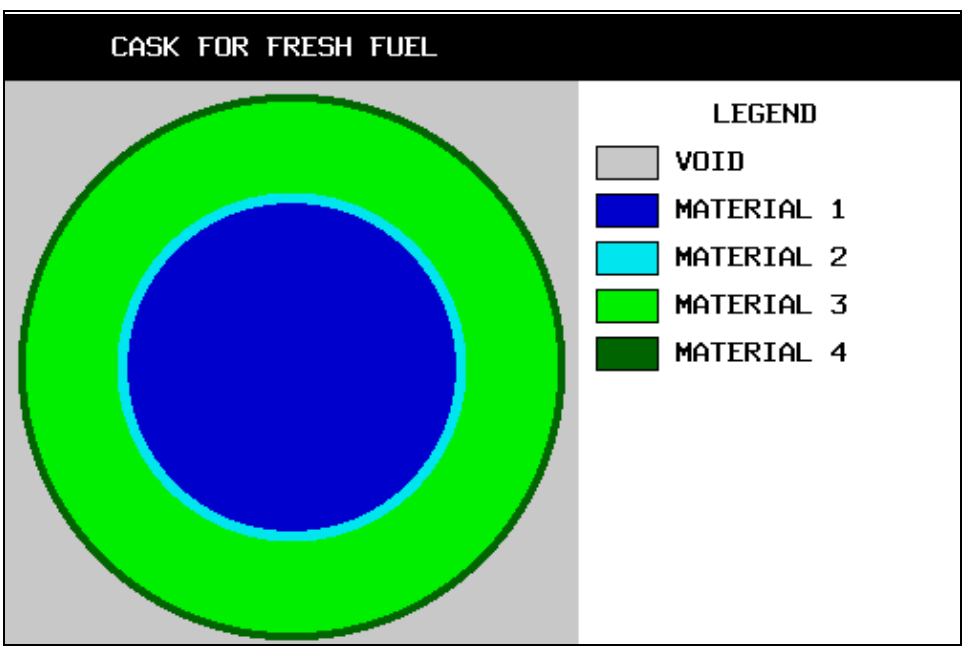

Fig. 3.2. Cask for fresh fuel.

Table 3.10. Atom composition of structure materials in the cask for fresh fuel [atoms/(b cm)]

Zone	Material 1	Material 2	Material 3	Material 4
Material	Air	Stainless steel	Caoutchouc	Stainless steel
R, cm	12.6	13.4	20.4	21.0
ΔR, cm	12.6	0.8	7.0	0.6
H		0.0001	0.05372	
C			0.01791	0.0001
N				
O			0.00895	
Si			0.00895	
Cr		0.01525		0.01525
Fe		0.06006		0.06006
Ni		0.00847		0.00847
Ti		0.00085		0.00085

Table 3.11. SAS2 results for UOX fresh fuel

	Neutron		Gamma	
Detector	Flux ($n/cm^2/sec$)	Dose (rem/hr)	Flux ($photons/cm^2/sec$)	Dose (rem/hr)
At surface	1.508×10^{-1}	8.038×10^{-6}	1.723×10^{1}	8.162×10^{-6}
0.5 m from surface	3.343×10^{-2}	1.889×10^{-6}	4.156×10^{0}	1.985×10^{-6}
1 m from surface	1.827×10^{-2}	1.044×10^{-6}	2.329×10^{0}	1.112×10^{-6}
2 m from surface	8.070×10^{-3}	4.695×10^{-7}	1.081×10^{0}	5.157×10^{-7}

Table 3.12. SAS2 results for MOX-W fresh fuel

	Neutron		Gamma	
Detector	Flux ($n/cm^2/sec$)	Dose (rem/hr)	Flux ($photons/cm^2/sec$)	Dose (rem/hr)
At surface	5.467×10^{1}	2.904×10^{-3}	1.265×10^{3}	1.056×10^{-3}
0.5 m from surface	1.211×10^{1}	6.825×10^{-4}	2.998×10^{2}	2.561×10^{-4}
1 m from surface	6.623×10^{0}	3.774×10^{-4}	1.664×10^{2}	1.425×10^{-4}
2 m from surface	2.928×10^{0}	1.701×10^{-4}	7.522×10^{1}	6.467×10^{-5}

Table 3.13. SAS2 results for MOX-R fresh fuel

	Neutron		Gamma	
Detector	Flux ($n/cm^2/sec$)	Dose (rem/hr)	Flux ($photons/cm^2/sec$)	Dose (rem/hr)
At surface	4.945×10^{2}	2.635×10^{-2}	2.845×10^{3}	3.265×10^{-3}
0.5 m from surface	1.096×10^{2}	6.192×10^{-3}	6.663×10^{2}	7.652×10^{-4}
1 m from surface	5.992×10^{1}	3.424×10^{-3}	3.679×10^{2}	4.199×10^{-4}
2 m from surface	2.649×10^{1}	1.543×10^{-3}	1.647×10^{2}	1.860×10^{-4}

Table 3.14. Heat generation for fresh fuel cask

	Nuclide thermal power in watts										
	Actinides										
Fuel Type	^{234}U	^{235}U	^{237}U	^{238}U	^{238}Pu	^{239}Pu	^{240}Pu	^{241}Pu	^{242}Pu	^{241}Am	Total
UOX	2.87×10^{-2}	1.05×10^{-3}		3.25×10^{-3}							3.30×10^{-2}
MOX-W				3.57×10^{-3}	2.09×10^{0}	3.34×10^{1}	7.57×10^{0}	1.09×10^{-1}		4.22×10^{-1}	4.36×10^{1}
MOX-R			1.26×10^{-7}	3.50×10^{-3}	2.28×10^{2}	2.99×10^{1}	4.64×10^{1}	8.45×10^{0}	1.66×10^{-1}	3.99×10^{1}	3.53×10^{2}

4. CALCULATIONAL RESULTS FOR TASK IIc: SHIELDING AND HEAT GENERATION FOR SPENT FUEL WITH A CASK

Task IIc was a study of a cask model typical of those used to transport fissile assemblies of spent fuel. The cask contained 12 fissile assemblies. A pin irradiation with a burnup of 60 GWd/MTHM at average linear power of 166 W/cm was done. The fuel temperature was T=1027K, and the temperature of the clad and the borated-light-water coolant was T=579K. A cooling time of 3 years was assumed. The densities of the nuclides for the borated water are given in Table 4.1; and the atom composition of the structural materials in the spent fuel cask are presented in Table 4.2. Each of the three types of fuel was analyzed. Dose rates at the surface of the cask and at 0.5, 1 and 2 meters from the surface were calculated using the SAS2 module of SCALE 4.3R. The dose rate results are presented in Tables 4.3-4.5. Initially the gamma dose rates were predicted by the author to be relatively independent of the fuel type. Thus, the higher gamma dose rates for the MOX fuels were surprising. Investigation of these differences revealed that the relatively higher neutron leakage with the MOX fuels as compared with UOX fuel produced more captured gammas; and since nearly 90% of the gammas are captured gammas, the resulting dose rates for MOX are higher than for LEU.

In addition to calculating dose rates, a heat generation study for the spent fuel cask was done using the ORIGEN module from SCALE 4.3R. The times of disposition used were 3 days, 10 days, and 1, 3, 10, and 100 years. The results for the various light elements, actinides and fission products are presented in Table 4.6.

The neutron source intensity after 3-year cooling was also calculated and is presented in Table 4.7. Curium 242 is dominant for the (alpha, n), and Curium 244 is dominant for the spontaneous fission. Curium 244 changes slightly for the three types of fuel, but the change is insignificant. Typically (alpha, n) results would be about 100 times smaller than the spontaneous fission results. After more years of cooling, the curium 242 would decay out. Table 4.8 shows the total neutron and gamma sources for the spent fuel cask after 3-year cooling.

Table 4.1. Borated-water composition [atoms/(b cm)]

^{1}H	4.783×10^{-2}
^{16}O	2.391×10^{-2}
^{10}B	4.7344×10^{-6}
^{11}B	1.9177×10^{-5}

Table 4.2. Atom composition of structure materials in the cask for spent fuel [atoms/(b cm)]

Region	1	2	3
Diameter, cm	132	200	225
T, K	523	300	300
Zr	0.002216		
Fe	0.0027	0.061	
Cr	0.0007	0.016	
Ni	0.0004	0.008	
B	0.00029		
O	0.0054		0.026
C			0.014
H			0.065

Table 4.3. SAS2 results for UOX spent fuel

	Neutron		Gamma	
Detector	Flux ($n/cm^2/sec$)	Dose (rem/hr)	Flux ($photons/cm^2/sec$)	Dose (rem/hr)
At surface	8.227×10^{2}	5.628×10^{-3}	1.837×10^{4}	3.345×10^{-2}
0.5 m from surface	4.254×10^{2}	3.082×10^{-3}	9.945×10^{3}	1.881×10^{-2}
1 m from surface	2.881×10^{2}	2.142×10^{-3}	6.789×10^{3}	1.289×10^{-2}
2 m from surface	1.508×10^{2}	1.276×10^{-3}	3.634×10^{3}	6.941×10^{-3}

Table 4.4. SAS2 results for MOX-W spent fuel

	Neutron		Gamma	
Detector	Flux ($n/cm^2/sec$)	Dose (rem/hr)	Flux ($photons/cm^2/sec$)	Dose (rem/hr)
At surface	2.189×10^{3}	1.497×10^{-2}	3.245×10^{4}	6.903×10^{-2}
0.5 m from surface	1.132×10^{3}	8.197×10^{-3}	1.718×10^{4}	3.775×10^{-2}
1 m from surface	7.665×10^{2}	5.696×10^{-3}	1.155×10^{4}	2.536×10^{-2}
2 m from surface	4.012×10^{2}	3.126×10^{-3}	6.008×10^{3}	1.312×10^{-2}

Table 4.5. SAS2 results for MOX-R spent fuel

	Neutron		Gamma	
Detector	Flux ($n/cm^2/sec$)	Dose (rem/hr)	Flux ($photons/cm^2/sec$)	Dose (rem/hr)
At surface	8.248×10^3	5.653×10^{-2}	9.258×10^4	2.241×10^{-1}
0.5 m from surface	4.265×10^3	3.096×10^{-2}	4.799×10^4	1.202×10^{-1}
1 m from surface	2.888×10^3	2.152×10^{-2}	3.177×10^4	7.949×10^{-2}
2 m from surface	1.512×10^3	1.181×10^{-2}	1.604×10^4	3.983×10^{-2}

Table 4.6. Heat generation for spent fuel cask

	Nuclide thermal power in watts										
	Time of disposition										
	Initial	3.0 d	10.0 d	30.0 d	100.00 d	365.0 d	1095.0 d	3650.0 d	9000.0 d	27000.0 d	36500.0 d
Light Elements											
UOX	1.05×10^{3}	3.42×10^{2}	2.94×10^{2}	2.58×10^{2}	1.62×10^{2}	4.92×10^{1}	3.07×10^{1}	1.19×10^{1}	1.72×10^{0}	5.60×10^{-3}	2.60×10^{-3}
MOX-R	9.10×10^{2}	2.89×10^{2}	2.44×10^{2}	2.13×10^{2}	1.32×10^{2}	3.73×10^{1}	2.25×10^{1}	8.65×10^{0}	1.24×10^{0}	3.72×10^{-3}	1.60×10^{-3}
MOX-W	9.87×10^{2}	3.15×10^{2}	2.67×10^{2}	2.34×10^{2}	1.45×10^{2}	4.15×10^{1}	2.52×10^{1}	9.72×10^{0}	1.40×10^{0}	4.29×10^{-3}	1.89×10^{-3}
Actinides											
UOX	6.69×10^{4}	1.54×10^{4}	3.75×10^{3}	1.67×10^{3}	1.27×10^{3}	6.21×10^{2}	3.16×10^{2}	2.79×10^{2}	2.41×10^{2}	1.69×10^{2}	1.49×10^{2}
MOX-R	7.19×10^{4}	2.28×10^{4}	1.32×10^{4}	1.10×10^{4}	8.69×10^{3}	4.22×10^{3}	2.10×10^{3}	1.72×10^{3}	1.31×10^{3}	7.29×10^{2}	6.21×10^{2}
MOX-W	6.89×10^{4}	1.78×10^{4}	7.12×10^{3}	5.14×10^{3}	3.97×10^{3}	1.72×10^{3}	6.72×10^{2}	5.74×10^{2}	4.91×10^{2}	3.51×10^{2}	3.17×10^{2}
Fission Products											
UOX	7.46×10^{5}	6.06×10^{4}	4.18×10^{4}	2.65×10^{4}	1.46×10^{4}	6.25×10^{3}	2.19×10^{3}	6.77×10^{2}	4.16×10^{2}	1.25×10^{2}	6.70×10^{1}
MOX-R	7.23×10^{5}	5.95×10^{4}	4.14×10^{4}	2.66×10^{4}	1.52×10^{4}	7.03×10^{3}	2.36×10^{3}	6.01×10^{2}	3.54×10^{2}	1.05×10^{2}	5.67×10^{1}
MOX-W	7.31×10^{5}	6.07×10^{4}	4.22×10^{4}	2.71×10^{4}	1.54×10^{4}	7.12×10^{3}	2.41×10^{3}	6.16×10^{2}	3.61×10^{2}	1.07×10^{2}	5.79×10^{1}

Table 4.7. Neutron source intensity after 3-year cooling

	UOX %	MOX-R %	MOX-W %
Fraction of (α,n)			
^{238}Pu	4.5	2.1	1.1
^{242}Cm	84.9	84.6	90.4
^{244}Cm	9.8	12.8	7.9
Fraction of SF			
^{238}Pu	0.05	0.01	0.01
^{242}Cm	24.4	18.6	29.5
^{244}Cm	73.4	73.6	67.5
^{246}Cm	0.7	0.1	0.7
^{252}Cf	1.4	6.6	2.1
Fraction of total			
^{242}Cm	27.6	21.3	33.3
^{244}Cm	69.8	71.2	63.8

Table 4.8. Total neutron and gamma source from SAS2

Source for spent fuel after 3-year cooling			
Particle Type	UOX	MOX-W	MOX-R
Neutron (n/sec)	6.83×10^{8}	1.81×10^{9}	6.37×10^{9}
Gammas (MeV/sec)	6.37×10^{15}	7.29×10^{15}	6.99×10^{15}

5. CONCLUSIONS

The ORNL results for these benchmarks differ in some ways from the Russian results which are given in Appendices B and C. The Russians used several different computer codes to do each of the calculations. When comparing calculations, the more similarities in the methods used, the better the comparison should be. Therefore, since all of the ORNL calculations were done using ENDF/B-V cross sections, whenever possible comparisons were made to Russian results that also used ENDF/B-V cross sections.

For Task I, both UOX and MOX-weapons grade results were compared to the Russian IPPE MCNP-BV/C calculations that used ENDF/B-V cross section data for the k-effective calculations. The MOX-reactor grade results were compared to the MCU/MCUDAT results because there were no reported Russian results using ENDF/B-V data. Analysis of the differences indicate that the k_{eff} for all three types of fuel differ by less than 1.2% for water densities down to 0.3 g/cc. Densities below this produce increasingly larger percentage differences, with the dry case, i.e., with void (no water anywhere) in the geometry, differing by 30 – 40%. The ORNL result is significantly lower for the dry cases; however, when ORNL ran cases eliminating the void space around the assemblies, the results were within 1% of the Russian results. Appendix E has the results of the KENO-VI calculation which does not contain a void region between assemblies. For MOX fuel, it is noteworthy that the local maximum multiplication factor for low water densities occurs at a higher H/fissile atom ratio in ORNL calculations than in Russian calculations. While the difference is slight, the result is noteworthy for dry storage safety analyses.

Comparison of the neutron source for Task IIa reveals that the ORNL result differs from the Russian results by less than 1% for UOX and MOX-R and by approximately 3% for MOX-W. The gamma source in photons/sec cannot be directly compared to the Russian result because of the differences in group structures; in particular, because the mean energy of the lowest energy group is quite different, the source in this group is skewed. In order to try to understand the differences, ORNL ran an ORIGEN-ARP case which has a gamma group structure more like the Russian structure; results agreed to within 5-6%. Comparison of the neutron source intensity indicates that for UOX the ORNL results for the individual isotopes differ by no more than 0.5% from the Russian IPPE-Z results, and the total intensity differs by no more than 1% from all three Russian calculations. For the mixed oxide fuels, all the isotopes that contribute a significant amount differ by no more than 1% from the IPPE-Z results. The ORNL ORIGEN-ARP results are all within 2% of the SAS2 results.

A comparison of the neutron dose rate result at the surface for UOX from the Task IIa calculations reveals that the ORNL neutron dose result is within 1% of the Russian IPPE-K (CARE+ANISN) result. Preliminary analysis of the gamma results at the surface of the UOX indicate a difference of about a factor of 9 but that applying an estimated equilibrium factor (in other words, including in the calculation daughter products at equilibrium concentrations which occur in naturally occurring uranium) to the ORNL results brings them within a factor of 1.5 of the Russian results. The neutron and gamma dose rate results for UOX at other detector locations cannot be individually compared because the reported Russian results are for total dose only. The total dose varies significantly because of the gamma results; however, as the distance to detector increases, the percentage of difference decreases.

For Task IIb calculations, neutron dose rates at the surface differ from the Russian results by 5% to 9%; and the ORNL gamma dose rates for the MOX-weapon grade falls between the Russian IPPE-K and the IPPE-Z results while the MOX-reactor grade is about 17% less than the IPPE-Z results. The UOX gamma dose rate is different by approximately a factor of 30. Because the Russian and Oak Ridge gamma cross-section libraries that were used do not have the same group structure, it is difficult to find all the reasons for the differences. Part of the difference for the UOX is caused by the fact that ORNL made no equilibrium assumptions for the daughter products of ^{238}U while the Russians took this into account. ORNL did not apply this because it was not specified in the problem description. Since most of the gamma source comes from ^{238}U due to the fact that each ^{238}U decay produces two gammas (nuclides ^{234}Th and ^{234m}Pa), there is a significant effect. As in the case for Task IIa, the neutron and gamma dose rates at the other detectors are not reported by the Russians; only the total dose rate is shown. The differences between the total dose rates calculated by ORNL and the Russians are significant due to the reasons stated above. The ORNL heat generation results are all within 2% for UOX, 1% for MOX-R and identical for MOX-W to the Russian results. The masses of the actinides differ by less than 0.5%. The source spectra per energy group is comparable for neutrons, but the gamma results are difficult to compare due to the group structure differences. Additional calculations using the same gamma group structures would likely resolve this problem.

For Task IIc (spent fuel) the neutron source for UOX after 3-year cooling is within 1% and for MOX-W within 5% of the Russian IPPE-K result while the MOX-R difference is the largest at over 10%.

Task IIc neutron dose rate for UOX at the surface is within 5% and for MOX-R within 1% of that calculated by the Russian IPPE-K method while the MOX-W difference is the largest at over 15%. The gamma dose rates for UOX differ by about 18%, the MOX-R by about 6%, and the MOX-W by approximately 20%. The MOX-R total dose gives the best comparison for all detectors. Resolution of the differences would require additional calculations using the same gamma group structure by both the Russian and ORNL scientists. The heat generation results vary from being the same to being up to 6% different from the Russian IPPE-K results which were calculated using the CARE, ANISN and CONSYST computer codes.

The input data files used to generate the results of these benchmarks have been archived and will be made available for additional studies.

6. REFERENCES

1. *SCALE: A Modular Code System for Performing Standardized Computer Analyses for Licencing Evaluation*, NUREG/CR-0200, Rev. 5 (ORNL/NUREG/CSD-2R5), Vols. I, II, and III, March 1997. Available from Radiation Safety Information Computational Center at Oak Ridge National Laboratory as CCC-545.

2. S. M. Bowman and L. C. Leal, "ORIGEN-ARP: Automatic Rapid Process for Spent Fuel Depletion, Decay, and Source Term Analysis," Vol. I, Sect. D1 of *SCALE: A Modular Code System for Performing Standardized Computer Analyses for Licencing Evaluation*, NUREG/CR-0200, Rev. 6 (ORNL/NUREG/CSD-2R6), Vols. I, II, and III, in 2000. Available later from Radiation Safety Information Computational Center at Oak Ridge National Laboratory as CCC-545.

APPENDIX A

DESCRIPTION OF SAFETY ANALYSIS COMPUTATIONAL BENCHMARK

APPENDIX A

DESCRIPTION OF SAFETY ANALYSIS COMPUTATIONAL BENCHMARK

A. Pavlovitchev (RRC KI),
A. Kalashnikov, G. Manturov (SSC RF IPPE)

A.1 Introduction

These benchmark specifications were designed to provide a few simple calculational benchmark problems for a MOX lattice that is typical of that which might be used for fissile materials disposition at NPPs with VVER-1000 type reactor.

The proposed calculational benchmark is concerned to criticality safety studies in fresh and spent fuel storage at the reactor and under a transportation of fissile assembly (FA) at NPP.

Fresh fuel storage will require criticality data for the water moderated MOX lattices. The same data should be applicable to certifying physics parameters of MOX fuel in the reactor core. Spent fuel storage should be licensed based on the same data as fresh fuel storage as well and quite the same data might be applicable to the transportation analysis of the FA in a cask.

The benchmark specifications describe two benchmark problems respectively named as Task I and Task II:

- *Task I is a criticality safety study in fresh fuel storage,*
- *Task II is a shielding and heat generation study with a cask.*

The benchmark study is concerned to the following type of fuel: MOX weapons-grade and civil plutonium fuel, and a traditional UOX uranium low-enriched fuel.

The FA model chosen was that of a VVER-1000 in assembly lattice of 312 pins all of which have the same initial composition. The assembly also contains 18 control rod guide tubes and a central instrumentation channel.

The storage model is typical of that which might be used at NPP with VVER-1000 type reactor. It is a 1-D infinite FA lattice with a pitch 40 cm.

The cask models for fresh and spent fuel are based on typical of those which might be used for a transportation of FAs. They are different for fresh and spent fuel.

A.2 Task I: Criticality Safety Study in Storage

In this task a study of criticality safety in fresh fuel storage is performed. It is assumed an infinite pool storage of FAs filled with a cold water. The triangular pitch is 40 cm. The geometric data for FA is given in Table A.1 and in Fig. A.1. The composition of fresh fuel is given in Table A.2. The temperature of FA for fresh condition is T = 300K. The cold water composition at T = 300K and $\gamma(H_2O) = 1$ g/cm^3 is assumed [atoms/(b cm)]:

H	0.06694
O	0.03347

Several calculations are to be performed for fresh FA for each type of fuel to provide a dependence of criticality parameter k_{eff} via water density for $\gamma(H_2O)$=1.0, 0.9, 0.8, 0.7, 0.6, 0.5, 0.4, 0.3, 0.2, 0.1, 0.05, 0.03, 0.02 and 0 [g/cm3]:

- function $k_{eff}(\gamma)$.

A.3 Task II: Shielding and Heat Generation Study with a Cask

In this task a study of shielding and radioactive characteristics at a transportation of FA is performed.

The task is divided on three parts:

- *Task IIa is a study of radioactive characteristics of fresh fuel,*
- *Task IIb is shielding and heat generation study of fresh fuel with a cask,*
- *Task IIc is shielding and heat generation study of spent fuel with a cask.*

A.3.1 Task IIa: Study of radioactive characteristics of fresh fuel

It is assumed a dry assembly of fresh fuel with geometric specifications given in Table A.1 and in Fig. A.1. The composition of fresh fuel is given in Table A.2. The temperature of FA for fresh condition is T=300K. No water is present.

Several calculations are to be performed for each type of fuel to provide shielding and radioactive characteristics:

- Neutron source strength: fractional by separate isotopes and spectrum in used group structure.
- Gamma strength: total and spectrum in used group structure.
- Dose rates at distance from the surface of FA equal to 0, 0.5, 1 and 2 meter.

A.3.2 Task IIb: Shielding and heat generation study of fresh fuel with a cask

It is assumed a model of a cask for fresh fuel. The cask model is simplified of that which is typical and might be used for a transportation of fresh FA.

Several calculations are to be performed for each type of fuel to provide shielding and radioactive characteristics:

- *Dose rates at distance from the surface of the cask equal to 0, 0.5, 1 and 2 meter.*
- *Heat generation - total and fractional by actinides.*

A.3.3 Task IIc: Shielding and heat generation study of spent fuel with a cask

It is assumed a model of a cask for spent fuel. The cask model is simplified of that which is typical and might be used for a transportation of spent FA. It contains 12 FA.

Before moving FA to the cask it is assumed a storaging of FA in a pool storage like that which was described in Task I. For calculation a spent fuel composition a pin-cell irradiation is to be performed with a discharge burnup of 60 GWd/MTHM at an average power 166 W/cm. The pin-cell cylinder specifications are: $r_{1,fuel}$=0.386cm, $r_{2,clad}$=0.4582cm, $r_{3,mod}$=0.7015cm. The initial fuel compositions are given in Table A.2. For the pin-cell burnup calculations the real composition of light water with boron is given in Table A.3. The operated temperatures should be used: the fuel

temperature is T_{fuel} = 1027K, the clad temperature is T_{clad} = 579K and borate-light-water coolant temperature is T_{mod} = 579K.

Several calculations are to be performed for each type of fuel to provide shielding and radioactive characteristics:

- *Nuclide composition of actinides and fission products in spent fuel, its activity.*
- *Neutron source strength: fractional by separate isotopes and spectrum in used group structure.*
- *Gamma source strength: total and spectrum in used group structure.*
- *Dose rates at distance from the surface of the cask equal to 0, 0.5, 1 and 2 meter.*
- *Heat generation - total and fractionally for actinides and fission products in spent fuel (one FA) via time of disposition which is equal to 3 and 10 days, and 1, 3, 10, 100 years.*

A.4 Benchmark Specifications

A.4.1 FA Geometry Data

The FA geometry is typical of a VVER-1000 assembly. It is a hexagonal FA shown in Fig. A.1. The geometric specifications are presented in Table A.1.

Table A.1. General assembly data

Parameter	Value
Number of fuel pins	312
Number of guide tubes	18
Number of instrumentation tubes	1
Pin pitch, cm	1.275
Fuel rods	
Pellet diameter, cm	0.772
Clad inside diameter, cm	0.772
Clad outside diameter, cm	0.91
Clad material	Zr
Active fuel length, cm	353
Guide tubes	
Inside diameter, cm	1.09
Outside diameter, cm	1.265
Material	Zr
Central instrumentation tube	
Inside diameter, cm	0.960
Outside diameter, cm	1.125
Material	Zr

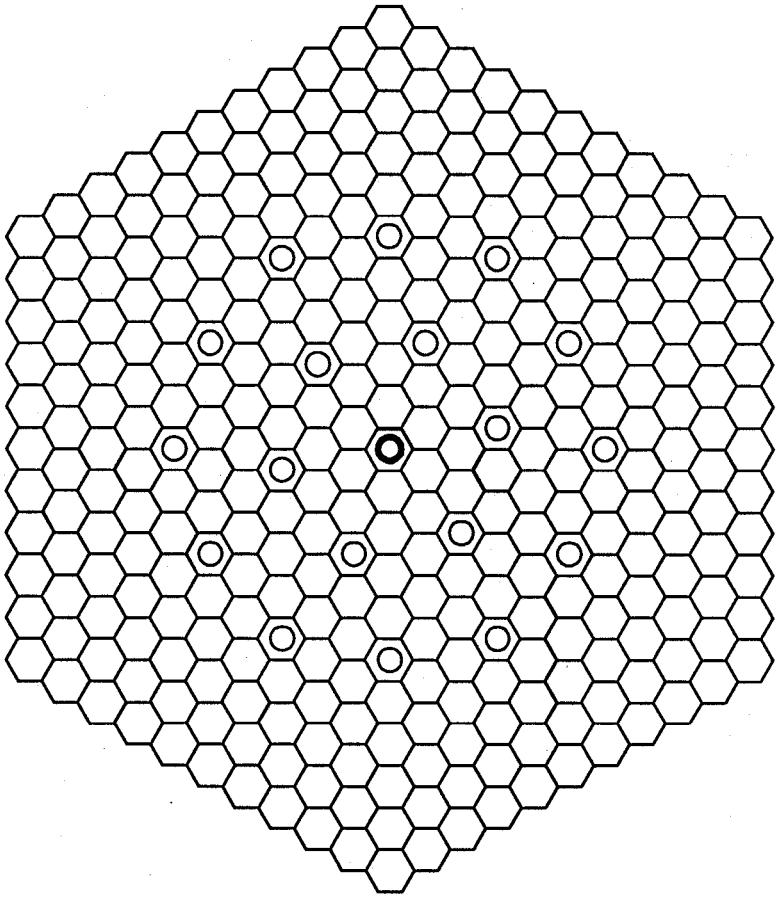

Fuel rod - 312

Guide tube - 18

Central instrumentation tube - 1

Fig. A.1. VVER-1000 FA geometry.

A.4.2 FA Material Data

Fuel.

Table A.2 contains fresh fuel compositions for MOX-W (4.2%) weapons-grade and MOX-R (6.1%) civil, reactor-grade plutonium, and UOX (4.4%).

Table A.2. MOX and UOX fresh fuel compositions [atoms/(b cm)]

Nuclides	MOX-W (4.2%)	MOX-R (6.1%)	UOX (4.4%)
^{16}O	4.3036 E-02	4.3051E-02	3.9235E-02
^{234}U	<2.0 E-07	<2.0E-07	8.0E-06
^{235}U	4.1762 E-05	4.0964E-05	8.7370E-04
^{238}U	2.0576E-02	2.0183E-02	1.8744E-02
^{236}Pu	<1.0E-12	<1.0E-10	
^{238}Pu	1.8089E-07	1.9720E-05	
^{239}Pu	8.4610E-04	7.5671E-04	
^{240}Pu	5.2111E-05	3.1941 E-04	
^{241}Pu	1.6078E-06	1.2464E-04	
^{242}Pu	2.6685E-07	6.8527E-05	
^{241}Am	1.7864E-07	1.6878E-05	

Cladding.

For simplicity, a uniform Zirconium composition 0.0423 atoms/(b cm) is assumed.

Coolant/moderator.

Light-water coolant density with boron is given in Table A.3.

Table A.3. Borate-water composition [atoms/(b cm)]

^{1}H	4.783E-02
^{16}O	2.391E-02
^{10}B	4.7344E-06
^{11}B	1.9177E-05

A.4.3 Cask Model for Fresh Fuel

The cask model for fresh fuel is based on that which is typical for a transportation of 1 fresh FA. The FA cylinder model is shown in Fig. A.2. The homogeneous FA compositions are presented in Table A.4. The geometric specifications and structure materials compositions are presented in Table A.5 and in Fig. A.3. The FA is placed co-centered into the cask.

Table A.4. Atom composition of cylinder model of FA in the cask for fresh fuel [atoms/(b cm)]

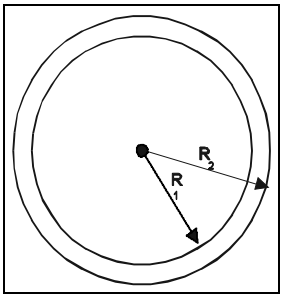

Fig. A.2. FA model

Zone	Region 1			Region 2
Material	MOX-W (4.2%)	MOX-R (6.1%)	UOX (4.4%)	Zr
R, cm	12.3	12.3	12.3	12.37
Zr	0.004834	0.004834	0.004834	0.0423
^{16}O	1.3224E-02	1.3228E-02	1.2056E-02	
^{234}U	<6.0E-08	<6.0E-08	2.5E-06	
^{235}U	1.2832E-05	1.2587E-05	2.6846E-04	
^{238}U	6.3224E-03	6.2016E-03	5.7595E-03	
^{236}Pu	<3.0E-13	<3.0E-11		
^{238}Pu	5.5582E-08	6.0594E-06		
^{239}Pu	2.5998E-04	2.3251E-04		
^{240}Pu	1.6012E-05	9.8145E-05		
^{241}Pu	4.9403E-07	3.8298E-05		
^{242}Pu	8.1995E-08	2.1056E-05		
^{241}Am	5.4891E-08	5.1861E-06		

Table A.5. Atom composition of structure materials in the cask for fresh fuel [atoms/(b cm)]

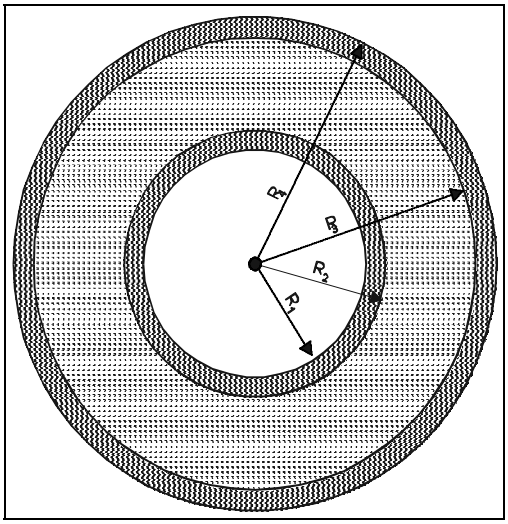

Fig. A.3. Cask for fresh fuel

Zone	Region 1	Region 2	Region 3	Region 4
Material	Air	Stainless steel	Caoutchouc	Stainless steel
R, cm	12.6	13.4	20.4	21.0
ΔR, cm	12.6	0.8	7.0	0.6
H		0.0001	0.05372	
C			0.01791	0.0001
N				
O			0.00895	
Si			0.00895	
Cr		0.01525		0.01525
Fe		0.06006		0.06006
Ni		0.00847		0.00847
Ti		0.00085		0.00085

A.4.4 Cask Model for Spent Fuel

The cask model for spent fuel is based that which is typical for a transportation of 12 spent FA. It is a cylinder model shown in Fig. A.4. The geometric specifications and structure materials compositions are presented in Table A.6. The fuel volume fraction in Region 1 is equal to 0.128. The volume fraction of 12 FA is equal to 0.423. For calculation of fuel nuclide densities in Region 1 the calculated spent fuel composition (zone 1 of pin-cell) should be multiplied by the factor 0.128.

Table A.6. Atom composition of structure materials in the cask for spent fuel [atoms/(b cm)]

Region	1	2	3
Diameter, cm	132	200	225
T, K	523	300	300
Zr	0.002216		
Fe	0.0027	0.061	
Cr	0.0007	0.016	
Ni	0.0004	0.008	
B	0.00029		
O	0.0054		0.026
C			0.014
H			0.065

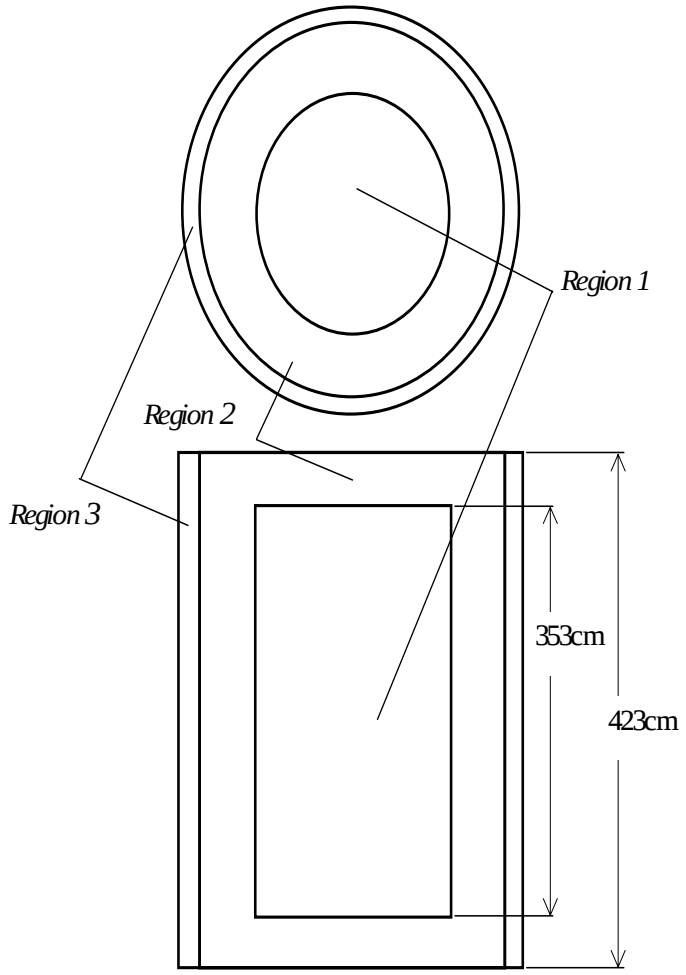

Fig. A.4. Cask geometry of spent FA.

A.5 Desired Results

For the Task I the desired results are a dependence of criticality parameter k_{eff} via water density:

- Function $k_{eff}(\gamma)$ for $\gamma(H_2O)$=1.0, 0.9, 0.8, 0.7, 0.6, 0.5, 0.4, 0.3, 0.2, 0.1, 0.05, 0.03, 0.02 and 0.

For the Task II the desired results are shielding and radioactive characteristics of FA:

- Neutron source strength total and fractional by separate isotopes in used group structure.
- Gamma source strength in used group structure.
- Dose rates at distance from the surface of FA at d=0, 0.5, 1 and 2 meter.

For the Task IIb fresh fuel calculations additionally should be presented:

- Heat generation [Wt/FA] - total and fractional by actinides associated with spontaneous fission and (alfa,n) reaction on oxygen [Wt/FA].

For the Task IIc spent fuel calculations additionally should be presented:

- Nuclide composition [g/FA].
- Activity of actinides and fission products [Bk/FA].
- Dose rates at distance from the surface of Cask at d=0, 0.5, 1 and 2 meter with spent FA after disposition in a pool storage t=3 year.
- Heat generation - total and fractionally for actinides, associated with spontaneous fission and (alfa,n) reaction on oxygen, and for fission products in spent fuel (one FA) via time of disposition t=3 and 10 days, and 1, 3, 10, 100 years.

List of actinides includes isotopes from U-232 up to Cm-248: U-232 U-233 U-234 U-235 U-236 U-237 U-238 Np-237 Np-238 Np-239 Pu-236 Pu-238 Pu-239 Pu-240 Pu-241 Pu-242 Am-241 Am-242 Am-242m Am-243 Cm-242 Cm-243 Cm-244 Cm-245 Cm-246 Cm-247 Cm-248.

List of fission products is defined for the following nuclei: Kr-85 Sr-90 Zr-93 Zr-95 Nb-95m Nb-95 Ru-106 Ag-110m I-129 I-131 Xe-133 Cs-134 Cs-136 Cs-137 Ce-141 Ce-144 Nd-147 Pm-147 Eu-154 Eu-155.

A.6 Contacts

With questions contact, please, to Gennadi Manturov (SSC RF IPPE, Obninsk), e-mail: abbn@ippe.rssi.ru.

APPENDIX B

CALCULATION RESULTS FOR TASK I: CRITICALITY SAFETY STUDY IN STORAGE

APPENDIX B

CALCULATION RESULTS FOR TASK I: CRITICALITY SAFETY STUDY IN STORAGE

B.1 The Desired Results

Benchmarks for criticality safety calculations simulating storage arrays of UO_2 – and MOX – VVER – fuel assemblies have been defined in proposal /1/.

Geometry Model and Materials

In this task a study of criticality safety in fresh fuel storage is performed. It is assumed infinite pool storage of FA's filled with a cold water. The triangular pitch is 40 cm. The geometric data for FA is given in Table B.1 and in Fig.B.1-B.2. Table B.2 contains fresh fuel compositions for MOX-W (4.2%) weapons-grade and MOX-R (6.1%) civil, reactor-grade plutonium, and UOX (4.4%).

The temperature of FA for fresh condition is T=300K. The cold water composition at T=300K and $\gamma(H_2O)$=1 g/cm^3 is [atom/(b×cm)]: H – 0.06694; O – 0.03347.

A hexagonal cell model with reflective boundaries was used for the infinite storage array of the fuel assemblies. The vertical length was set to 353 cm with reflective boundaries on bottom and top.

Table B.1. General assembly data

Parameter	Value
Number of fuel pins	312
Number of guide tubes	18
Number of instrumentation tubes	1
Pin pitch, cm	1.275
Fuel rods	
Pellet diameter, cm	0.772
Clad inside diameter, cm	0.772
Clad outside diameter, cm	0.91
Clad material	Zr
Active fuel length, cm	353
Guide tubes	
Inside diameter, cm	1.09
Outside diameter, cm	1.265
Material	Zr
Central instrumentation tube	
Inside diameter, cm	0.96
Outside diameter, cm	1.125
Material	Zr

Table B.2. MOX and UOX fresh fuel compositions [atom/(b×cm)]

Nuclides	UOX (4.4%)	MOX-W (4.2%)*	MOX-R (6.1%)*
^{16}O	3.9235E-02	4.3036E-02	4.3051E-02
^{234}U	8.0E-06	2.0E-07	2.0E-07
^{235}U	8.7370E-04	4.1762E-05	4.0964E-05
^{238}U	1.8744 E-02	2.0576E-02	2.0183E-02
^{238}Pu		1.8089E-07	1.9720E-05
^{239}Pu		8.4610E-04	7.5671E-04
^{240}Pu		5.2111E-05	3.1941E-04
^{241}Pu		1.6078E-06	1.2464E-04
^{242}Pu		2.6685E-07	6.8527E-05
^{241}Am		1.7864E-07	1.6878E-05

* All Pu.

Cladding.

A uniform Zirconium composition 0.0423 atoms/(b×cm) is assumed.

The calculations are to be performed for each type of fuel to provide a dependence of criticality parameter k_{eff} via water density for $\gamma(H_2O)$=1.0, 0.9, 0.8, 0.7, 0.6, 0.5, 0.4, 0.3, 0.2, 0.1, 0.05, 0.03, 0.02 and 0 [g/cm^3].

B.2 Short Description of the Used Methods

Participants	**CODE**	**LIBRARY**	Organization
T. Ivanova	**KENO**	**ABBN93**	IPPE
V. Vnukov	**MMKFK**	**ABBN78**	IPPE
Ye. Rozhikhin	**MCNP**	**B-V/C**	IPPE
V. Koscheev	**MCNP**	**B-V/S**	IPPE
M. Semenov	**MCNP**	**B-VI**	IPPE
S. Marin	**MCU**	**MCUDAT**	RRC KI
G. Jerdev	**KENO**	**ABBN93/S**	IPPE

All calculations have been performed with Monte-Carlo method using different cross-section libraries.

KENO-ABBN93 (IPPE) – KENO-VI code was used for calculations in P_5 order of anisotropy with 299-group ABBN93 cross-section data set /2/. The resonance self-shielding effects were taken into account by using Bondarenko self-shielding factors. The thermalization effects were taken into account by using thermalized P_0 and P_1 multigroup scattering matrices in energy region below 4.65 eV.

MMKFK-ABBN78 (IPPE) – MMKFK code was used for calculations with 26-group ABBN78 cross-section data set /3/ and subgroup approximation in resonance region. The thermalization effects were taken into in energy region below 1 eV.

MCNP-BV/C (IPPE) – MCNP-4a code with continuous-energy cross-section library based on the ENDF/B-V data set.

MCNP-BV/S (IPPE) – the same code and library as previous calculation but the subgroup approximation was used for ^{235}U, ^{238}U and ^{239}Pu in unresolved resonance region.

MCNP-BVI (IPPE) – MCNP-4a code with continuous-energy cross-section library based on the ENDF/B-VI (Release 2) data set.

MCU-MCUDAT (RRC KI) – MCU-RFFI/A code with DLC/MCUDAT-1.0 cross-section library.

Note:

1. The sizes of guide tubes and central instrumentation tube are different from sizes at table 1 (Description of test).

Used sizes (at description): inside diameter – 1.10(1.09), outside diameter – 1.30(1.265). So the total area became larger than 17 %.

2. The ZR-alloy (Zr+Nb+Hf) was used instead ZR (ρ=0.0423).

3. Diameter of fuel pellet is also different – 0.755(0.772), but atomic densities of fuel are the same.

As the result for UOX with density of water 1g/cm^3 it leads to decrease of k_{eff} - 0.6%.

KENO-ABBN93/S (IPPE) – the same code and cross-sections as KENO-ABBN93 but the subgroup approximation was used for ^{238}U in resonance region.

Results

All calculation results and its comparing are presented at Table B.3 – B.8 and Figure B.3 –B.5.

1. Pavlovitchev (RRC RF KI), A. Kalashnikov, G. Manturov (SSC RF IPPE). Description of Safety Analysis Computational Benchmark. IPPE.
2. G. Manturov, M. Nikolaev, A. Tsiboulia. ABBN-93 Group Data Library. Nuclear Data for Calculation of Neutron and Photon Radiation Fields. Vienna, IAEA, INDC(CCP)-409/L,1997.
3. L. Abagyan et al. Gruppovye konstanti dlya rascheta reaktorov i zaschity. M., Energoizdat, 1981 (in Russia).

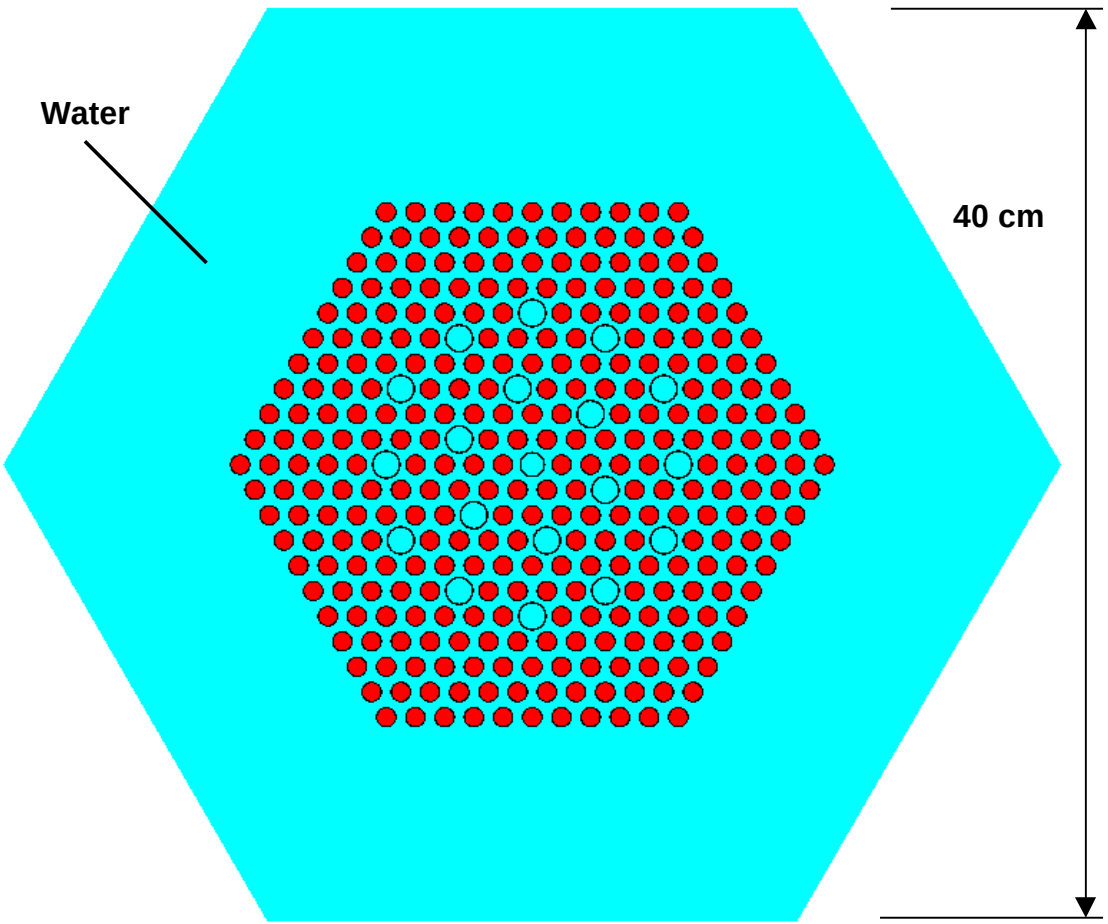

Fig. B.1 Calculation cell of storage

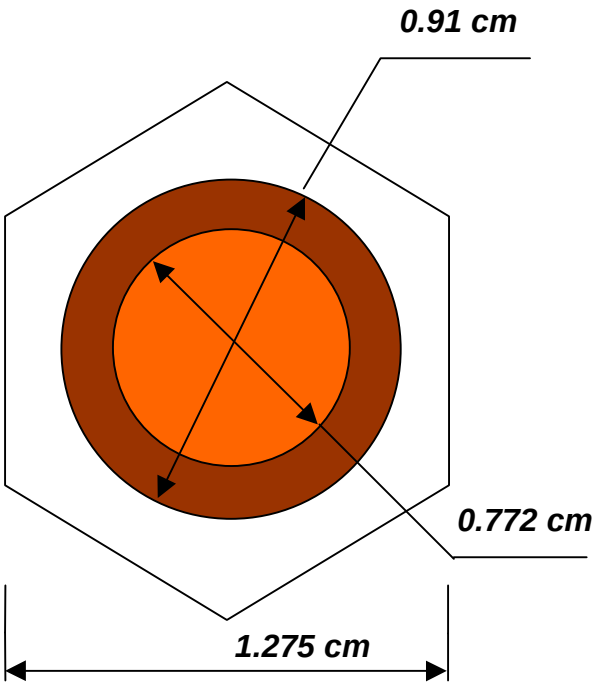

Fig. B.2 Pin - cell model

Table B.3. K-inf for UOX fuel

CODE LIBRARY Organization H2O density	**KENO** **ABBN93** IPPE	**MMKFK** **ABBN78** IPPE	**MCNP** **B-V/C** IPPE	**MCNP** **B-V/S** IPPE	**MCNP** **B-VI** IPPE	**MCU** **MCUDAT** RRC KI	**KENO** **ABBN93/S** IPPE
0.00	0.6931	0.7060	0.6679 *	0.6927	0.7000	0.6916	0.6921
0.02	1.0382	1.0190	1.0067	1.0166	1.0171	1.0183	1.0325
0.03	1.1400	1.1210	1.1140	1.1229	1.1223	1.1259	1.1389
0.05	1.2798	1.2620	1.2531	1.2608	1.2578	1.2645	1.2746
0.10	1.3895	1.3780	1.3757	1.3781	1.3769	1.3791	1.3881
0.20	1.3112	1.3100	1.3048	1.3065	1.3035	1.3071	1.3115
0.30	1.1503	1.1560	1.1515	1.1530	1.1496	1.1559	1.1571
0.40	1.0234	1.0290	1.0217	1.0239	1.0191	1.0246	1.0267
0.50	0.9449	0.9410	0.9386	0.9394	0.9363	0.9447	0.9426
0.60	0.8996	0.9040	0.8969	0.8964	0.8926	0.9140 *	0.9005
0.70	0.8876	0.8930	0.8828	0.8842	0.8798	0.8859	0.8888
0.80	0.8937	0.8960	0.8899	0.8911	0.8864	0.8891	0.8954
0.90	0.9109	0.9150	0.9077	0.9074	0.9020	0.9063	0.9119
1.00	0.9328	0.9340	0.9291	0.9295	0.9250	0.9266	0.9344

*) ***Not used for calculation Mean***

Table B.4. K-inf for UOX fuel

CODE LIBRARY Organization H2O density	MEAN (Std. Dev.,%)	**KENO ABBN93** IPPE	**MMKFK ABBN78** IPPE	**MCNP B-V/C** IPPE	**MCNP B-V/S** IPPE	**MCNP B-VI** IPPE	**MCU MCUDAT** RRC KI	**KENO ABBN93/S** IPPE
0	0.6963 (**0.54**)	−0.47	1.39	—	−0.52	0.53	−0.68	−0.61
0.02	1.0181 (**1.30**)	1.98	0.09	−1.12	−0.15	−0.10	0.02	1.42
0.03	1.1231 (**1.17**)	1.51	−0.18	−0.81	−0.01	−0.07	0.25	1.41
0.05	1.2609 (**1.09**)	1.50	0.09	−0.62	−0.01	−0.25	0.28	1.09
0.10	1.3788 (**0.39**)	0.77	−0.06	−0.23	−0.05	−0.14	0.02	0.67
0.20	1.3070 (**0.28**)	0.32	0.23	−0.17	−0.04	−0.27	0.01	0.34
0.30	1.1532 (**0.24**)	−0.25	0.24	−0.15	−0.02	−0.31	0.23	0.34
0.40	1.0239 (**0.29**)	−0.05	0.50	−0.22	0	−0.47	0.07	0.27
0.50	0.9409 (**0.32**)	0.42	0.01	−0.25	−0.16	−0.49	0.40	0.18
0.60	0.9004 (**0.40**)	−0.08	0.41	−0.38	−0.44	−0.86	—	0.02
0.70	0.8857 (**0.46**)	0.22	0.83	−0.33	−0.17	−0.66	0.02	0.35
0.80	0.8915 (**0.37**)	0.25	0.51	−0.18	−0.04	−0.57	−0.27	0.44
0.90	0.9084 (**0.44**)	0.27	0.73	−0.08	−0.11	−0.71	−0.23	0.38
1.00	0.9298 (**0.38**)	0.32	0.45	−0.08	−0.04	−0.52	−0.35	0.49

*) $(K_{eff,i} - Mean) * 100\%/Mean$

Fig. B.3. UOX fuel

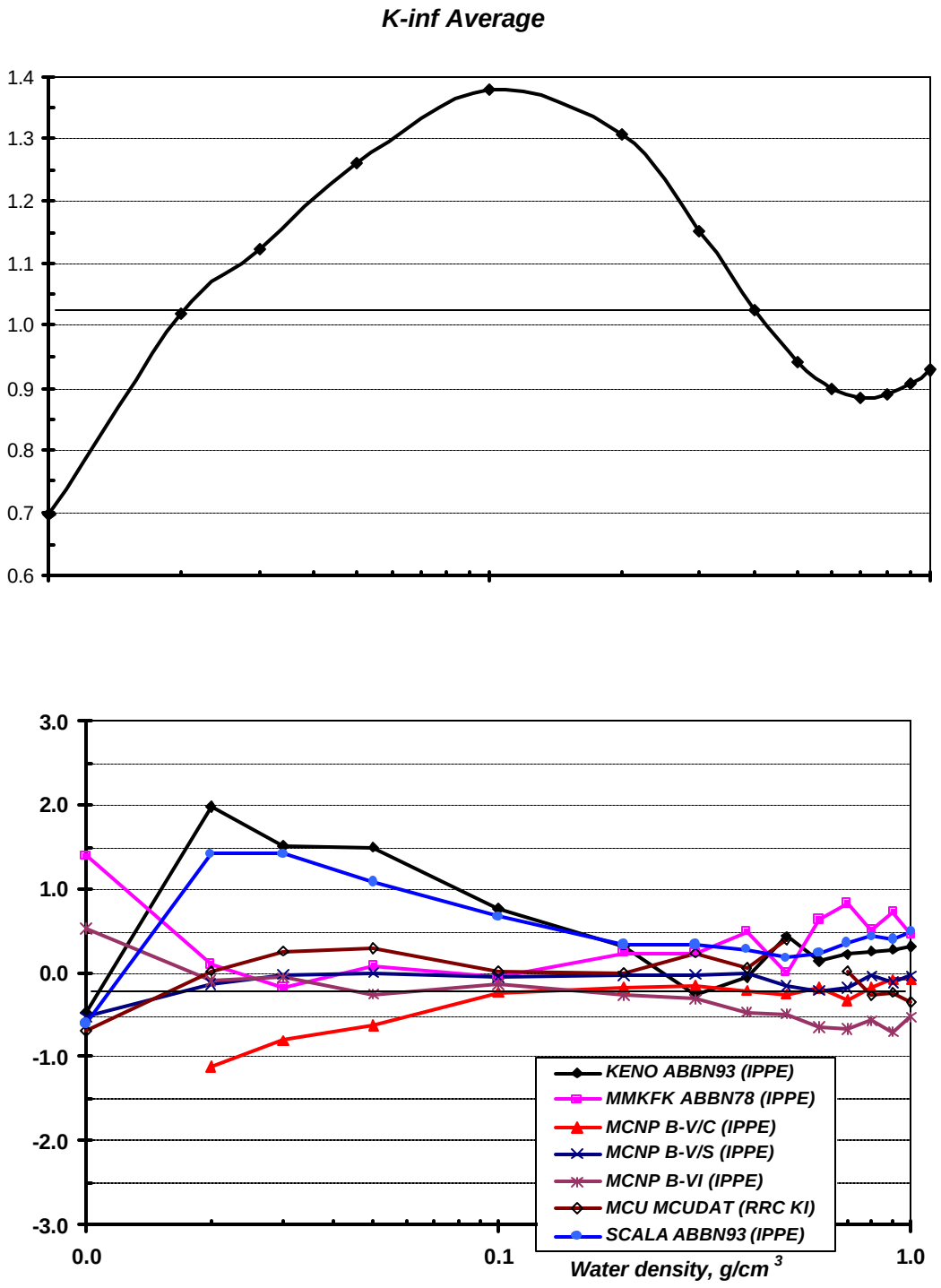

Percent Difference Relative to Mean

Table B.5. K-inf for MOX-W fuel

CODE LIBRARY Organization H2O density	**KENO** **ABBN93** IPPE	**MMKFK** **ABBN78** IPPE	**MCNP** **B-V/C** IPPE	**MCNP** **B-V/S** IPPE	**MCNP** **B-VI** IPPE	**MCU** **MCUDAT** RRC KI	**KENO** **ABBN93/S** IPPE
0	0.7238	0.7280	0.7098 *	0.7272	0.7310	0.7148	0.7230
0,02	0.9795	0.9510	0.9638	0.9719	0.9708	0.9761	0.9780
0,03	1.0688	1.0360	1.0519	1.0599	1.0575	1.0631	1.0632
0,05	1.1911	1.1700	1.1800	1.1869	1.1821	1.1886	1.1862
0,1	1.3237	1.3190	1.3201	1.3237	1.3178	1.3193	1.3181
0,2	1.2849	1.2960	1.2919	1.2939	1.2837	1.2845	1.2829
0,3	1.1501	1.1580	1.1571	1.1568	1.1491	1.1464	1.1479
0,4	1.0215	1.0330	1.0293	1.0319	1.0229	1.0525 *	1.0234
0,5	0.9369	0.9500	0.9447	0.9449	0.9373	0.9402	0.9428
0,6	0.8939	0.9080	0.8999	0.8994	0.8917	0.9057 *	0.8960
0,7	0.8791	0.8960	0.8836	0.8847	0.8758	0.8787	0.8815
0,8	0.8850	0.8980	0.8887	0.8885	0.8815	0.8836	0.8859
0,9	0.9016	0.9150	0.9036	0.9043	0.8984	0.9017	0.9048
1	0.9232	0.9410	0.9257	0.9277	0.9206	0.9230	0.9267

*) ***Not used for calculation Mean***

Table B.6. Percent difference relative to mean (MOX-W fuel) *

CODE LIBRARY Organization H2O density	MEAN (Std. Dev.,%)	**KENO** **ABBN93** IPPE	**MMKFK** **ABBN78** IPPE	**MCNP** **B-V/C** IPPE	**MCNP** **B-V/S** IPPE	**MCNP** **B-VI** IPPE	**MCU** **MCUDAT** RRC KI	**KENO** **ABBN93/S** IPPE
0	0.7248 (**0.72**)	−0.14	0.44	—	0.33	0.86	−1.38	−0.25
0.02	0.9693 (**0.98**)	1.05	−1.89	−0.57	0.27	0.15	0.70	0.90
0.03	1.0562 (**0.98**)	1.20	−1.91	−0.40	0.36	0.13	0.66	0.67
0.05	1.1823 (**0.63**)	0.75	−1.04	−0.19	0.39	−0.01	0.53	0.33
0.1	1.3192 (**0.28**)	0.34	−0.02	0.07	0.34	−0.11	0.01	−0.08
0.2	1.2874 (**0.43**)	−0.20	0.67	0.35	0.50	−0.29	−0.23	−0.35
0.3	1.1518 (**0.41**)	−0.15	0.54	0.46	0.43	−0.23	−0.47	−0.34
0.4	1.0264 (**0.48**)	−0.47	0.65	0.29	0.54	−0.34	—	−0.29
0.5	0.9419 (**0.48**)	−0.53	0.86	0.30	0.32	−0.49	−0.18	0.09
0.6	0.8973 (**0.64**)	−0.38	1.19	0.29	0.24	−0.62	—	−0.14
0.7	0.8822 (**0.71**)	−0.35	1.56	0.16	0.28	−0.73	−0.40	−0.08
0.8	0.8864 (**0.63**)	−0.16	1.31	0.26	0.23	−0.56	−0.32	−0.06
0.9	0.9026 (**0.74**)	−0.11	1.38	0.11	0.19	−0.46	−0.10	0.25
1	0.9258 (**0.73**)	−0.28	1.64	−0.01	0.20	−0.56	−0.31	0.09

* ***($K_{eff,i}$ – Mean) * 100%/Mean***

Fig. B.4. MOX - W fuel

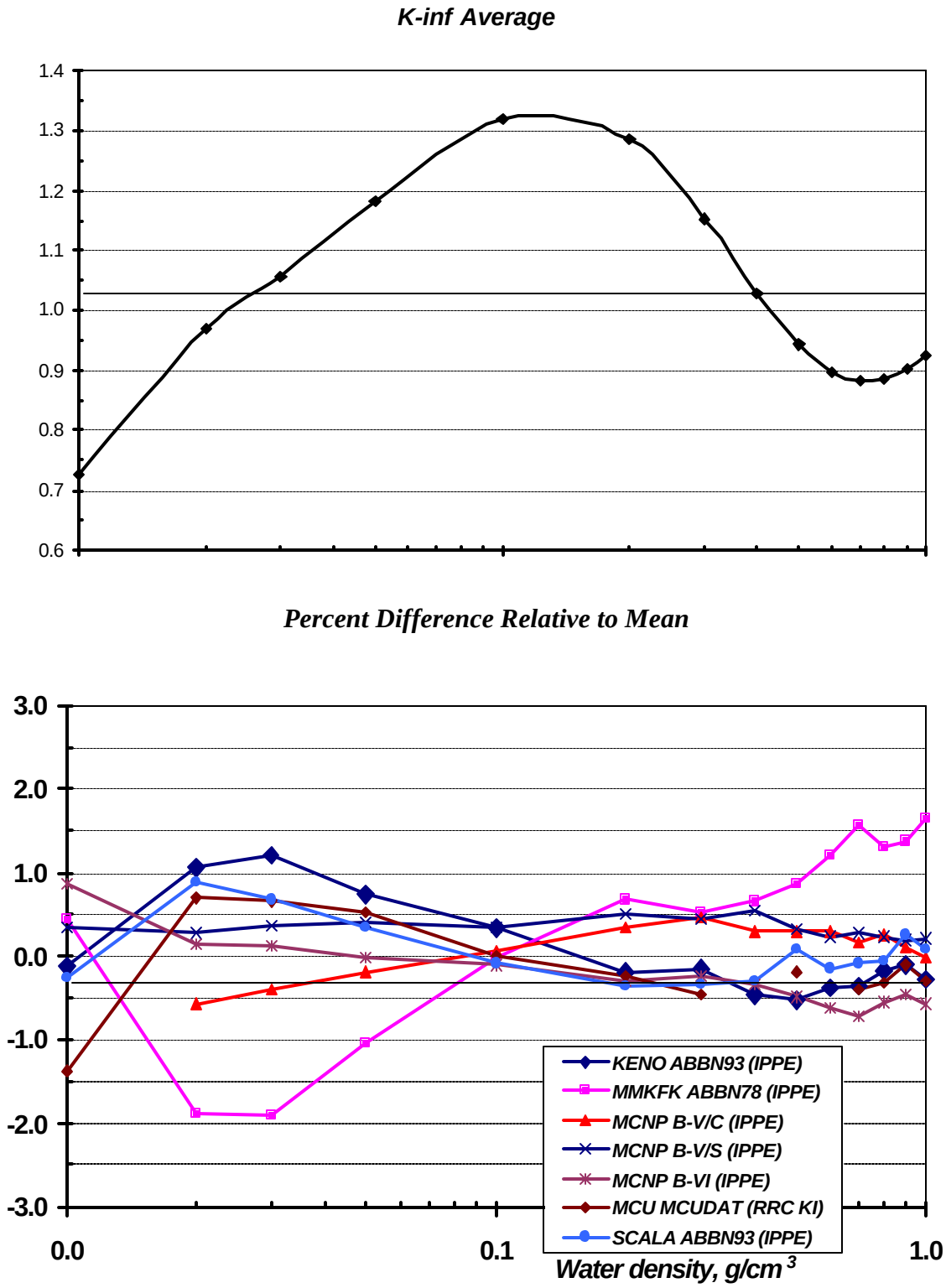

Table B.7. K-inf for MOX-R fuel

CODE LIBRARY Organization H2O density	**KENO** **ABBN93** IPPE	**MMKFK** **ABBN78** IPPE	**MCU** **MCUDAT** RRC KI
0.00	0.7862	0.7930	0.7794
0.02	0.9623	0.9400	0.9537
0.03	1.0168	0.9980	1.0081
0.05	1.1038	1.0780	1.0973
0.10	1.2100	1.1980	1.2087
0.20	1.1848	1.1780	1.1835
0.30	1.0640	1.0580	1.0596
0.40	0.9459	0.9440	0.9430
0.50	0.8647	0.8580	0.8638
0.60	0.8215	0.8180	0.8270 *
0.70	0.8047	0.7960	0.8011
0.80	0.8054	0.8030	0.8029
0.90	0.8197	0.8200	0.8187
1.00	0.8404	0.8390	0.8380

* *Not used for calculation Mean*

Table B.8. Percent difference relative to mean (MOX-R fuel) *

CODE LIBRARY Organization H_2O density	MEAN (Std. Dev.,%)	**KENO** **ABBN93** IPPE	**MMKFK** **ABBN78** IPPE	**MCU** **MCUDAT** RRC KI
0.00	0.7874 **(0.76)**	-0.15	0.72	-1.01
0.02	0.9508 **(1.00)**	1.21	-1.13	0.31
0.03	1.0061 **(0.82)**	1.07	-0.80	0.20
0.05	1.0921 **(1.02)**	1.08	-1.29	0.48
0.10	1.2046 **(0.47)**	0.45	-0.54	0.34
0.20	1.1830 **(0.29)**	0.16	-0.42	0.05
0.30	1.0611 **(0.26)**	0.28	-0.29	-0.14
0.40	0.9446 **(0.14)**	0.14	-0.06	-0.16
0.50	0.8632 **(0.42)**	0.18	-0.60	0.08
0.60	0.8192 **(0.24)**	0.28	-0.14	—
0.70	0.8008 **(0.45)**	0.48	-0.60	0.03
0.80	0.8031 **(0.21)**	0.28	-0.02	-0.03
0.90	0.8180 **(0.38)**	0.21	0.25	0.09
1.00	0.8385 **(0.20)**	0.23	0.07	-0.05

* $(K_{eff,i} - Mean) * 100\%/Mean$

Fig. B.5. MOX - R fuel

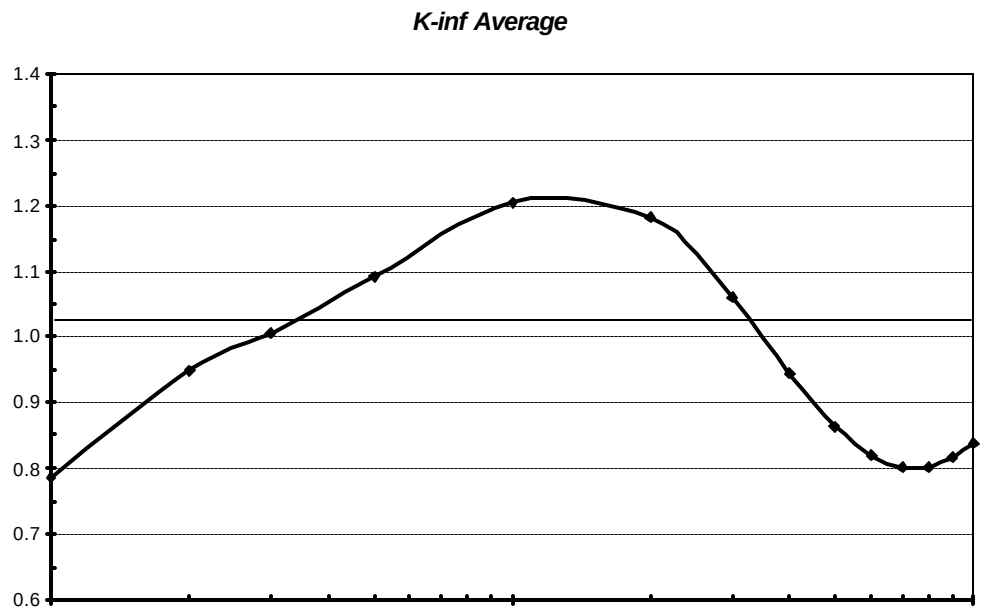

Percent Difference Relative to Mean

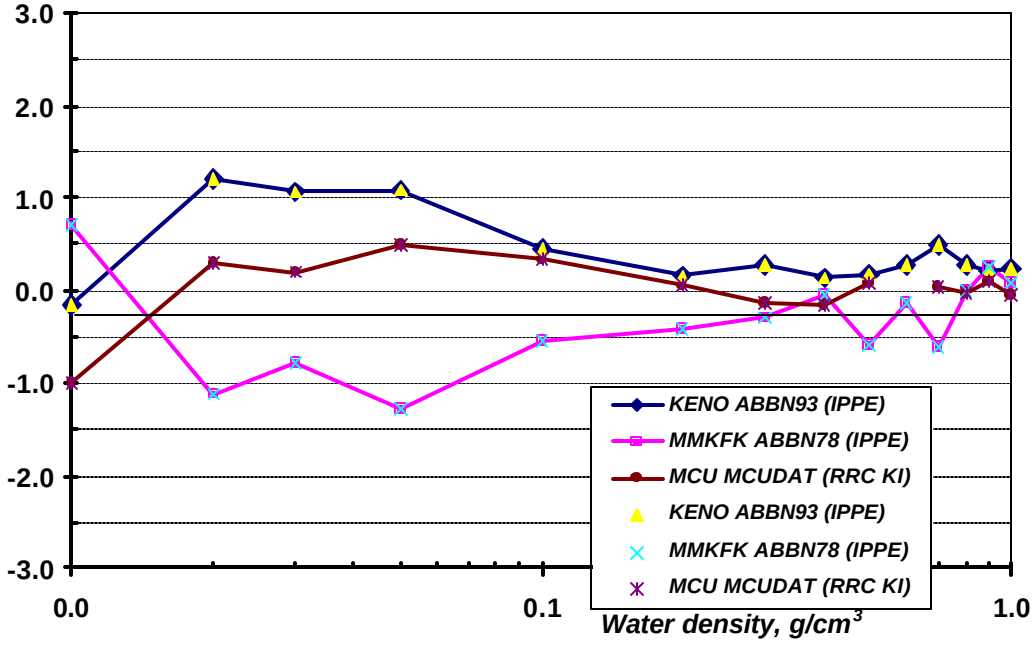

Fig. B.6. K-inf average

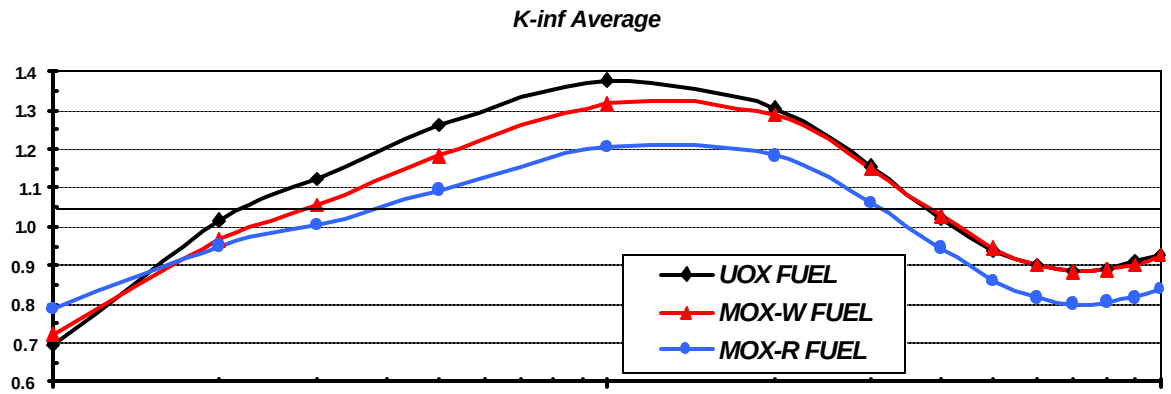

(MOX-W - -UOX)/UOX

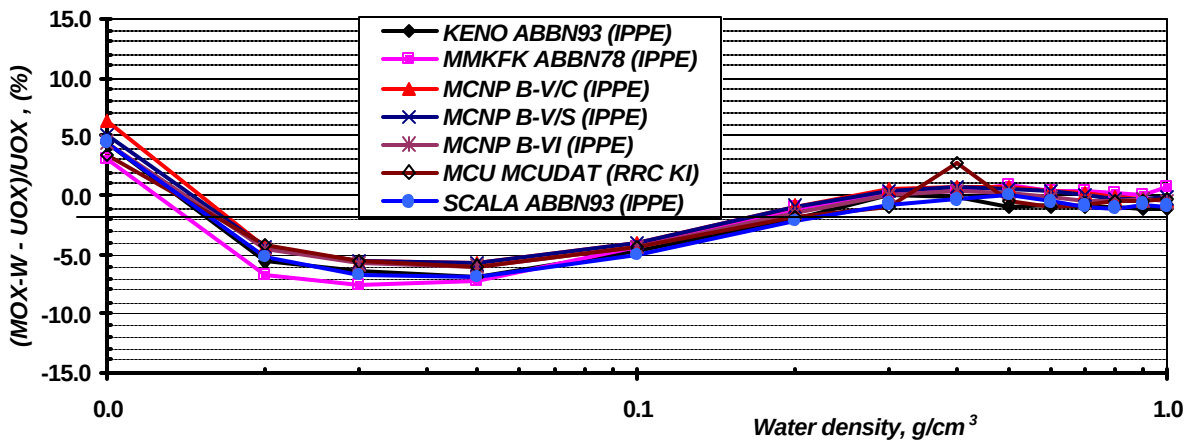

(MOX-R - -UOX)/UOX

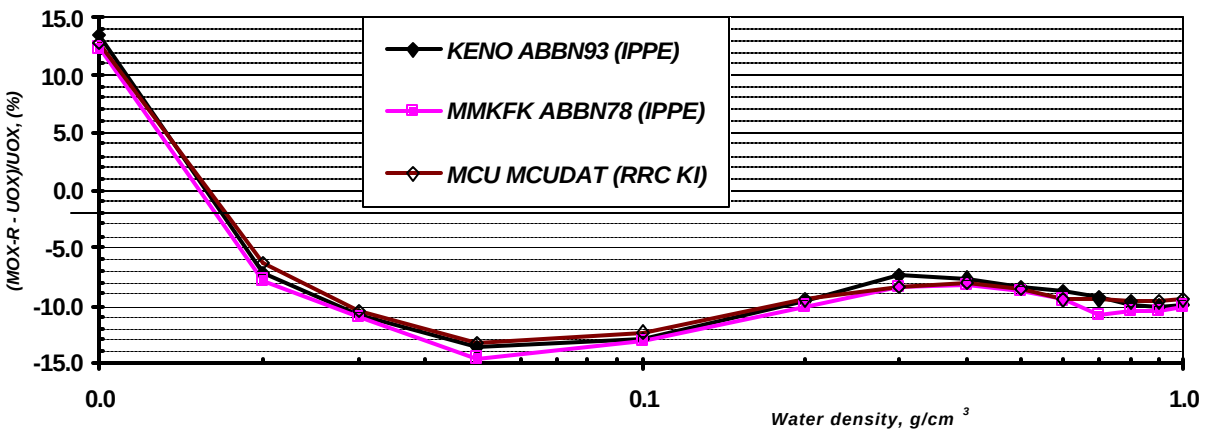

APPENDIX C

CALCULATION RESULTS FOR TASKS IIa AND IIb: SHIELDING AND HEAT GENERATION STUDY FOR FRESH FUEL

APPENDIX C

CALCULATION RESULTS FOR TASK IIa AND TASK IIb: SHIELDING AND HEAT GENERATION STUDY FOR FRESH FUEL

C.1 The Desired Results

In this task a study of shielding and radioactive characteristics of FAs with fresh fuel at a transportation is performed: the Task IIa - without a container and the Task IIb - with a Cask.

In this task a study of criticality safety under storing of fresh fuel is performed.

It is assumed a model of a dry assembly of fresh fuel with geometric specifications given in Table A.1 and in Fig. A.1 of the Benchmark Description. The temperature of FA for fresh conditions is T=300K. No water is presented. The composition of fresh fuel and the description of the Cask model are given in Tables A.4 and A.5 but also in Figs. A.2 and A.3 of the Description.

For each type of fuel should be calculated:

- Neutron source strength: total and fractional by separate isotopes and spectrum in a used group structure.
- Gamma source strength: total and spectrum in a used group structure.
- Dose rates at the distance from the surface of the FA or the Cask equal to 0, 0.5, 1 and 2 meter.
- Heat generation in the case of the Cask: total and fractional by actinides.

C.2 Short Description of the Used Methods

Participated results:

Participants	**ID**
CARE + ANISN + ABBN-93	IPPE-K
ORIGEN + TWODANT + ABBN-93	IPPE-Z
ANISN + CASK	IPPE-L

IPPE-K (A. Kotchetkov, G. Khohlov)

The sources of neutron and gamma emission were computed with CARE code [1] developed at IPPE. It calculates isotope compositions of actinides and fission products during reactor operating and after shutdown. The intensity of neutrons from spontaneous fission and (α,n) reaction on oxygen executed with the data [2]. The intensity of gamma-emission of fuel estimated on the basis ABBN93 data from [3]. The group energy structure corresponds to the ABBN data set. Neutron spectra data via energy of α-particles was compiled and used for the computation of neutron sources caused by α,n reaction on oxygen in dioxide fuel. The JAERI spectra were averaged into the ABBN 26 group energy range.

The dose rates and transport calculations were performed with ANISN code. The CONSYST code [4] with 26 neutron and 15 photon group ABBN-90 data set was used for calculations of mixture cross-sections and transferring data to the CCC-254/ANISN formats.

[1] Kochetkov A. " Code Care - calculations of isotopic kinetics, radioactive and ecological characterictics of nuclear fuel under raduation and cooling". Report IPPE 2431, 1995(in Russian)
[2] JAERI 1324, Data Book for Calculating Neutron Yields from (α,n) Reaction and Spontaneous Fission, 1992
[3] MKRZ: Decay scheme of radionuclides . Energy and Intensity of radiation. Moscow.Energoatomizdat, 1992.
[4] RSICC DLC-182 "ABBN-90: Multigroup Constant Set for Calculation of Neutron and Photon Radiation Fields and Functionals, Including the CONSYST2 Program".

IPPE-Z (S. Zabrodskaia, G. Manturov)

The sources of neutron and gamma emission were computed with ORIGEN-S code [1] from the American SCALE4.3 system. Under these calculations all needed for ORIGEN-S averaged cross-sections were calculated by the COCNSYST code [2] with ABBN-93 data set [3].

The dose rates and transport calculations were performed with TWODANT code in P_3 order of anisotropy approximation using group constants set ABBN-93 with 299 neutron and 15 photon groups. The CONSYST code was used for calculations of mixture cross-sections and transferring data to the CCC-547/TWODANT formats.

[1] O.W.Hermann, R.M.Westfall. ORIGEN-S: SCALE system module to calculate fuel depletion, actinide transmutation, fission product buildup and decay, and association source terms. SCALE4.3, Vol.2, Section F7, 1995
[2] RSICC DLC-182 "ABBN-90: Multigroup Constant Set for Calculation of Neutron and Photon Radiation Fields and Functionals, Including the CONSYST2 Program".
[3] G.N. Manturov, M.N. Nikolaev, A.M. Tsiboulia. ABBN-93 Group Data Library. Part 1. Nuclear Data for Calculation of Neutron and Photon Radiation Fields. Vienna, IAEA, INDC(CCP)-409/L, 1997, p.65-110.

IPPE-L (V. Levanov)

The radiation characteristics of actinides used at the calculations were taken from the publication 38 ICRP [1]. The yields of neutrons per decay took from Ref. [2].

About 50 % of the neutron source is caused by (a-n) reaction on oxygen. It was assumed that the spectrum of neutrons is the fission spectrum.

Since the actinides in fresh fuel irradiate very soft gamma-radiation (Åg<50 keV) which is not taken into consideration in the constants system CASK, the dose rates calculations near the fresh FA (without shielding) was carried out by means of analytical expressions. The shielding effect of an external wall outside fuel rods has been taken into consideration too.

The dose rates calculations near fresh FA and with the container were carried out with the code ANISN using the constants system CASK.

[1] MKRZ: Decay scheme of radionuclides. Energy and Intensity of radiation. Moscow.Energoatomizdat, 1992.
[2] JAERI 1324, part 2. Data book for calculations neutron yields from (a-n) reaction and spontaneous fission.

C.3 Comparison of the Calculation Results

The participated results with their comparison presented in Tables C.1 to C.6. The Tables C.7 to C.21 present a comparison of the input data used by different participants.

Table C.1. UO2 - Comparison of dose rates [μSv/h] calculated by different methods

Comparison Case UO2	**[IPPE-K]** **CARE+ ANISN, ABBN-90 26 N +15 G**	**[IPPE-Z]** **ORIGEN+ TWODANT, ABBN-93 299 N + 15 G**	**[IPPE-L]** **ANISN, CASK 22 N + 18 G, using analytic expressions**
SOURCE:			
neutron	5727	5760	5790
gamma	8.30E+9	8.30E+9	**6.50E+9**
DOSE RATES:			
Fuel Assembly (FA)			
k-eff used	*0.08*	*0.08*	*0.10*
neutron	0.43	0.41	**1.14**
gamma	20.8*	23.1*	**28.0***
On surface of FA	21.2	23.6	29.1
At distance 0.5 m	3.17	3.24	3.9
At distance 1.0 m	1.75	1.74	2.0
At distance 2.0 m	0.91	0.86	0.77
FA in a CASK			
k-eff used	*0.33*	*0.33*	*0.32*
neutron	0.09	0.10	0.09
gamma	3.28*	3.80*	**2.70***
On surface of CASK	3.37	3.90	2.80
At distance 0.5 m	0.84	0.95	0.80
At distance 1.0 m	0.46	0.53	0.47
At distance 2.0 m	0.23	0.26	0.19

* It was assumed that the U-238 is in equilibrium with Th-234 and Pa-234m

Table C.2. MOX WEAPON - Comparison of dose rates [μSv/h] calculated by different methods

Comparison Case MOX-W	[IPPE-K] CARE+ ANISN, ABBN-90 26 N +15 G	[IPPE-Z] ORIGEN+ TWODANT, ABBN-93 299 N + 15 G	[IPPE-L] ANISN, CASK 22 N + 18 G, using analytic expressions
SOURCE			
neutron	2.04E+6	2.13E+6	1.92E+6
gamma	5.64E+12	4.15E+12	3.40E+12
DOSE RATES:			
Fuel Assembly (FA)			
k-eff used	*0.10*	*0.10*	0.*10*
neutron	121	178	**378**
gamma	133	**24**	184
On surface of EA	254	202	**562**
At distance 0.5 m	42	31	73.6
At distance 1.0 m	23	18	35.2
At distance 2.0 m	12	10	13.9
FA in a CASK			
k-eff used	*0.34*	*0.34*	*0.32*
neutron	25.6	**38.9**	30.5
gamma	18.8	**4.4**	**26.0**
On surface of CASK	44.4	43.3	56.5
At distance 0.5 m	12.9	12.7	16.0
At distance 1.0 m	8.7	8.6	9.6
At distance 2.0 m	5.9	6.1	3.8

Table C.3. MOX REACTOR - Comparison of dose rates [μSv/h] calculated by different methods

Comparison Case MOX-R	[IPPE-K] CARE+ ANISN, ABBN-90 26 N +15 G	[IPPE-Z] ORIGEN+ TWODANT, ABBN-93 299 N + 15 G	[IPPE-L] ANISN, CASK 22 N + 18 G, using analytic expressions
SOURCE			
neutron	1.84E+7	1.90E+7	1.78E+7
gamma	8.23E+13	**10.3E+13**	8.20E+13
DOSE RATES:			
Fuel Assembly (FA)			
k-eff used	*0.11*	*0.11*	*0.10*
neutron	1290	1567	**3500**
gamma	866	617	**1970**
On surface of EA	2156	2184	**5470**
At distance 0.5 m	345	338	793
At distance 1.0 m	191	191	390
At distance 2.0 m	102	105	159
FA in a CASK			
k-eff used	*0.33*	*0.33*	*0.32*
neutron	240	335	282
gamma	56	40	**140**
On surface of CASK	296	375	422
At distance 0.5 m	88	107	125
At distance 1.0 m	61	71	73
At distance 2.0 m	43	49	30

Table C.4. Heat generation at fresh FA: UO_2 (Wt)

Nuclide	IPPE-K	IPPE-Z	IPPE-L
U-234	2.930E-02	2.94E-02	2.93E-02
U-235	1.050E-03	1.06E-03	1.09E-03
U-238	3.253E-03	3.27E-03	3.26E-03
Total	3.360E-02	3.37E-02	3.36E-02

Table C.5. Heat generation at fresh FA: MOX-W (4.2%) (Wt)

Nuclide	IPPE-K	IPPE-Z	IPPE-L
U-234	7.032E-04	7.03E-4	7.03E-04
U-235	5.019E-05	5.04E-5	5.22E-05
U-238	3.571E-03	3.58E-03	3.58E-03
PU236	3.642E-04	3.58E-04	
Pu238	2.088E+00	2.10E+00	2.09E+00
PU-239	3.331E+01	3.33E+01	3.34E+01
PU-240	7.581E+00	7.78E+00	7.59E+00
PU-241 +U237	1.084E-01	1.29E-01	1.09E-01
Pu242	6.398E-04	6.52E-04	6.41E-04
Am-241	4.231E-01	4.23E-01	4.25E-01
Total	4.352E+01	4.37E+01	4.36E+01

Table C.6. Heat generation at fresh FA: MOX-R (6.1%) (Wt)

Nuclide	IPPE-K	IPPE-Z	IPPE-L
U-234	7.032E-04	7.06E-04	7.03E-04
U-235	4.925E-05	4.95E-05	1.06E-04
U-238	3.503E-03	3.53E-03	3.51E-03
Pu236	3.642E-02	3.58E-02	
Pu238	2.276E+02	2.29E+02	2.28E+02
PU-239	2.979E+01	2.99E+01	2.99E+01
PU-240	4.648E+01	4.65E+01	4.65E+01
PU-241 +U237	8.406E+00	8.57E+00	8.42E+00
Pu242	1.643E-01	1.69E-01	1.65E-01
Am-241	3.997E+01	4.00E+01	4.01E+01
Total	3.525E+02	3.54E+02	3.53E+02

Table C.7. Comparison of main radioactive characteristics: $T_{1/2}$ (year)

Nuclide	Type of decay	IPPE-K	IPPE-Z	IPPE-L
U-232	α	7.200E+01	6.9809E+01	7.20E+01
U-233	α	1.592E+05	1.5920E+05	1.59E+05
U-234	α	2.446E+05	2.4571E+05	2.45E+05
U-235	α	7.040E+08	7.0379E+08	7.04E+08
U-236	α	2.340E+07	2.3421E+07	2.34E+07
U-237	β	1.848E-02		
U-238	α	4.468E+09	4.4680E+09	4.47E+09
Np237 (+Pa233)	α,β	2.140E+06	2.1399E+06	2.14E+06
Np238	β	5.796E-03		
Np239	β	6.434E-03		
Pu236	α	2.851E+00		
Pu-238	α	8.774E+01	8.7712E+01	8.77E+01
Pu-239	α	2.410E+04	2.4108E+04	2.41E+04
Pu-240	α	6.560E+03	6.5626E+03	6.54E+03
Pu-241 (+U237)	β,α	1.435E+01	1.435E+01	1.44E+01
Pu-242	α	3.763E+05	3.7360E+05	3.76E+05
Am-241	α	4.320E+02	4.3254E+02	4.32E+02
Am242	β,e	1.828E-03		
Am242m (+Am242)	i,α,β,ε	1.520E+02	1.4110E+02	1.52E+02
Am243 (+Np239)	α,β	7.370E+03	7.3706E+03	7.38E+03
Cm-242	α	4.463E-01	4.4617E-01	4.46E+01
Cm-243	α,ε	2.850E+01	2.8557E+01	2.85E+01
Cm-244	α	1.811E+01	1.8100E+01	1.81E+01
Cm-245	α	8.500E+03	8.4987E+03	8.50E+03
Cm-246	α	4.730E+03		
Cm247	α	1.560E+07		
Cm248	α	3.400E+05		

Table C.8. Comparison of main radioactive characteristics : Decay energy (MeV) and number of α -particles per decay

Nuclide	Type of decay	IPPE-K		IPPE-Z		IPPE-L	
U-232	α	5.302	1	5.32	1	5.41	1
U-233	α	4.817	1	4.83	1	4.89	1
U-234	α	4.761	1	4.77	1	4.85	1
U-235	α	4.391	1	4.43	1	4.86	1
U-236	α	4.481	1	4.49		4.59	1
U-237	α	0	0		1		
U-238	α,β	4.184	1	4.20	1	4.28	1
Np237 (+Pa233)	α	4.769	1	4.70		5.34	1
Np238	α	0	0				
Np239	α	0	0				
Pu236	β,α	5.753	1		1		
Pu-238	α	5.487	1	5.49	1	5.59	1
Pu-239	α	5.148	1	5.15	1	5.24	1
Pu-240	i,α,β,ε	5.156	1	5.16	2.39E-5	5.25	1
Pu-241 (+U237)	α,ε	4.893	2.45E-5	4.89	1	0.0536+ 0.336	2.0E-5
Pu-242	α	4.891	1	4.90	1	4.98	1
Am-241	α,ε	5.479	1	5.48		5.66	1
Am242	α	0	0		4.5E-03		
Am242m (+Am242)	α	5.207	0.0045	5.22	1	0.271	4.8E-03
Am243 (+Np239)		5.271	1	5.28	1	5.87	1
Cm-242		6.102	1	6.04	1	6.22	1
Cm-243		5.813	0.9976	5.85	1	6.15	1
Cm-244		5.795	1	5.80	1	5.9	1
Cm-245		5.361	1	5.43		5.61	1
Cm-246		5.377	1				
Cm247		4.918	1				
Cm248		5.07	0.9174				

Table C.9. Comparison of main radioactive characteristics: yield of reaction (α-n) at UO_2 (1/decay)

Nuclide	Type of decay	IPPE-K	IPPE-Z	IPPE-L*
U-232	α	1.90E-08	2.085E -08	1.90E-08
U-233	α	1.39E-08	1.4290E-08	1.39E-08
U-234	α	1.33E-08	1.3592E-08	1.33E-08
U-235	α	8.96E-09	9.9762E-09	8.96E-09
U-236	α	1.01E-08	1.0595E-08	1.01E-08
U-237	β	0.00E+00		
U-238	α	6.52E-09	7.7276E-09	6.52E-09
Np237 (+Pa233)	α,β	1.34E-08	1.2868E-08	1.34E-08
Np238	β	0.00E+00		
Np239	β	0.00E+00		
Pu236	α	2.59E-08		
Pu-238	α	2.18E-08	2.3443E-08	2.18E-08
Pu-239	α	1.73E-08	1.8403E-08	1.73E-08
Pu-240	α	1.74E-08	1.8541E-08	1.74E-08
Pu-241 (+U237)	β,α	1.46E-08	1.5017E-08	
Pu-242	α	1.46E-08	1.5140E-08	1.46E-08
Am-241	α	2.17E-08	2.3287E-08	2.17E-08
Am242	β,e	0.00E+00		
Am242m (+Am242)	i,α,β,ε	1.79E-08	1.9383E-08	1.79E-08
Am243 (+Np239)	α,β	1.86E-08	2.0272E-08	1.86E-08
Cm-242	α	3.31E-08	3.2823E-08	3.31E-08
Cm-243	α,ε	2.68E-08	2.9445E-08	2.68E-08
Cm-244	α	2.65E-08	2.8580E-08	2.65E-08
Cm-245	α	1.97E-08	2.2514E-08	1.97E-08
Cm-246	α	1.99E-08		
Cm247	α	1.51E-08		
Cm248	α	1.64E-08		

* Yield per any decay event

Table C.10. Comparison of main radioactive characteristics: spontaneous fission (1/decay)

Nuclide	Type of decay	IPPE-K	IPPE-Z	IPPE-L
U-232	α	1.288E-12	1.2819E-12	2.80E-12
U-233	α	1.948E-12		3.20E-12
U-234	α	1.975E-11	2.9237E-11	3.20E-11
U-235	α	3.409E-09	1.2201E-10	4.80E-09
U-236	α	1.931E-09	1.0000E-09	1.40E-09
U-237	β	5.491E-22		
U-238	α	1.091E-06	1.0900E-06	1.10E-06
Np237 (+Pa233)	α,β	4.008E-12		
Np238	β	5.689E-21		
Np239	β	2.097E-19		
Pu236	α	1.808E-09		
Pu-238	α	4.194E-09	4.0000E-09	4.20E-09
Pu-239	α	9.851E-12	9.8560E-12	1.20E-11
Pu-240	α	1.232E-07	1.2300E-07	1.09E-07
Pu-241 (+U237)	β,α	1.292E-14		
Pu-242	α	1.183E-05	1.1803E-05	1.23E-05
Am-241	α	1.312E-11	8.9820E-12	1.20E-11
Am242	β,e	4.524E-13		
Am242m (+Am242)	i,α,β,ε	4.144E-10	4.1440E-10	5.10E-10
Am243 (+Np239)	α,β	5.544E-10	9.3240E-11	3.20E-10
Cm-242	α	1.601E-07	1.6300E-07	1.84E-07
Cm-243	α,ε	8.146E-10		
Cm-244	α	3.649E-06	3.7170E-06	3.73E-06
Cm-245	α	7.969E-09		
Cm-246	α	7.657E-04		
Cm247	α	0.000E+00		
Cm248	α	2.583E-01		

Table C.11. Masses of actinides at 1 FA of fresh fuel UO_2 (g)

Nuclide	IPPE-K	IPPE-Z	IPPE-L
U-234	1.603E+02	1.63E+02	1.63E+02
U-235	1.758E+04	1.76E+04	1.76E+04
U-238	3.819E+05	3.82E+05	3.82E+05
Total	3.997E+05	4.00E+5	4.00E+5

Table C.12. Masses of actinides at 1 FA of fresh fuel MOX-W (4.2%) (g)

Nuclide	IPPE-K	IPPE-Z	IPPE-L
U-234	4.006E+00	3.92E+00	3.91E+00
U-235	8.402E+02	8.41E+02	8.38E+02
U-238	4.192E+05	4.20E+05	4.19E+05
Pu-236	2.020E-05		
Pu-238	3.686E+00	3.69E+00	3.69E+00
Pu-239	1.731E+04	1.73E+04	1.73E+04
Pu-240	1.071E+03	1.07E+03	1.07E+03
Pu-241 +U237	3.317E+01	3.32E+01	3.32E+01
Pu-242	5.529E+00	5.54E+00	5.53E+00
Am-241	3.686E+00	3.69E+00	3.69E+00
Total	4.385E+05	4.39E+05	4.39E+05

Table C.13. Masses of actinides at 1 FA of fresh fuel MOX-R (6.1%) (g)

Nuclide	IPPE-K	IPPE-Z	IPPE-L
U-234	4.006E+00	3.92E+00	3.91E+00
U-235	8.241E+02	8.25E+02	825
U-238	4.112E+05	4.12E+05	4.11E+05
Pu-236	2.020E-03		
Pu-238	4.018E+02	4.02E+02	4.02E+02
Pu-239	1.548E+04	1.55E+04	1.55E+04
Pu-240	6.563E+03	6.57E+03	6.56E+03
Pu-241 +U237	2.572E+03	2.57E+03	2.57E+03
Pu-242	1.420E+03	1.42E+03	1.42E+03
Am-241	3.482E+02	3.49E+02	3.49E+02
Total	4.389E+05	4.39E+05	4.40E+05

Table C.14. Neutron source strength at 1 FA of fresh fuel UO_2 (n/s)

Nuclide	IPPE-K	IPPE-Z	IPPE-L
U-234	4.965E+02	5.11E+02	5.03E+02
U-235	1.739E+01	1.42E+01	1.93E+01
U-238	5.218E+03	5.23E+03	5.26E+03
Total	5.727E+03	5.76E+03	5.79E+03

Table C.15. Neutron source strength at 1 FA of fresh fuel MOX-W (4.2%) (n/s)

Nuclide	IPPE-K	IPPE-Z	IPPE-L
U-234	1.241E+01	1.23E+01	1.21E+01
U-235	8.314E-01	6.79E-01	9.23E-01
U-238	5.728E+03	5.73E+03	5.78E+03
Pu-236	1.107E+01	1.14E+01	
Pu-238	6.072E+04	6.48E+04	6.08E+04
Pu-239	6.886E+05	7.29E+05	6.90E+05
Pu-240	1.266E+06	1.31E+06	1.14E+06
Pu-241 +U237	3.891E+01	5.56E-01	
Pu-242	9.516E+03	9.647E+03	9.90E+03
Am-241	1.017E+04	1.09E+04	1.02E+04
Total	2041000	2.13E+06	1.92E+06

Table C.16. Neutron source strength at 1 FA of fresh fuel MOX-R (6.1%) (n/s)

Nuclide	IPPE-K	IPPE-Z	IPPE-L
U-234	1.21E+01	1.23E+01	1.21E+01
U-235	1.87E+00	6.60E-01	1.87E+00
U-238	5.67E+03	5.62E+03	5.67E+03
Pu236		1.14E+03	
Pu238	6.63E+06	7.07E+06	6.63E+06
PU-239	6.17E+05	6.54E+05	6.17E+05
PU-240	7.00E+06	7.86E+06	7.00E+06
PU-241 +U237		3.72E+03	
Pu242	2.55E+06	2.42E+06	2.55E+06
Am-241	9.62E+05	1.03E+06	9.62E+05
Total	1.842E+07	1.90E+07	1.78E+07

Table C.17. Neutron source spectrum normalized to 1 and total intensity at 1 FA calculated by IPPE-Z using ORIGEN (n/s)

N gr.	Energy boundaries, MeV	UO_2	MOX-W	MOX-R
1	20.0 - 6.43	1.611E-02	1.077E-02	1.268E-02
2	6.43 - 3.0	2.072E-01	2.365E-01	2.277E-01
3	3.0 - 1.85	2.744E-01	3.572E-01	3.285E-01
4	1.85 - 1.4	1.329E-01	1.254E-01	1.271E-01
5	1.4 - 0.9	1.646E-01	1.277E-01	1.397E-01
6	0.9 - 0.4	1.715E-01	1.192E-01	1.374E-01
7	0.4 - 0.1	3.350E-02	2.322E-02	2.687E-02
8-18	0.1 - 0	0	0	0
	Total	5.76E+03	2.13E+06	1.90E+07

Table C.18. Gamma source spectrum normalized to 1 and total intensity at 1 FA calculated by IPPE-Z (photons/s)

N gr.	Energy boundaries, MeV	UO_2	MOX-W	MOX-R
1-6	11.0 - 2.5	0	0	0
7	2.5 - 1.75	2.376E-04	5.220E-07	2.060E-08
8	1.75 - 1.25	3.705E-04	8.148E-07	3.213E-08
9	1.25 - 0.75	6.733E-03	1.228E-05	4.847E-07
10	0.75 - 0.35	1.705E-03	3.562E-06	3.567E-06
11	0.35 - 0.15	8.301E-02	1.593E-04	4.683E-04
12	0.15 - 0.08	8.535E-02	4.092E-04	1.054E-03
13	0.08 - 0.04	3.200E-02	5.730E-02	2.058E-01
14	0.04 - 0.02	2.143E-02	3.758E-03	1.350E-02
15	0.02 - 0.01	7.691E-01	9.385E-01	7.792E-01
	Total	8.305E+09	4.149E+12	1.030E+14

Table C.19. Neutron source spectrum normalized to 1 and total intensity at 1 FA calculated by IPPE-K using CARE (n/s)

N gr.	Energy boundaries, MeV	MOX-W	MOX-R	UO_2
1	14.5 - 6.5	8.281E-03	8.383E-03	1.251E-02
2	6.5 - 4.5	4.592E-02	4.779E-02	7.134E-02
3	4.0 - 2.5	1.365E-01	1.503E-01	1.628E-01
4	2.5 - 1.4	2.446E-01	2.563E-01	2.627E-01
5	1.4 - 0.8	1.587E-01	1.783E-01	1.987E-01
6	0.8 - 0.4	1.372E-01	1.532E-01	1.482E-01
7	0.4 - 0.2	9.169E-02	7.942E-02	7.262E-02
8	0.2 - 0.1	6.231E-02	4.990E-02	3.432E-02
9	0.1 - 0.0465	6.279E-02	4.214E-02	2.182E-02
10	4.65E-2 - 2.15E-2	2.837E-02	1.877E-02	8.810E-03
11	2.15E-2 - 1.E-2	1.284E-02	8.404E-03	3.626E-03
12	1E-2 - 4.65E-3	5.896E-03	3.829E-03	1.541E-03
13	4.65E-3 - 2.15E-3	2.711E-03	1.751E-03	6.688E-04
14	2.15E-3 - 1.E-3	1.243E-03	7.998E-04	2.942E-04
15	1E-3 - 4.65E-4	5.767E-04	3.699E-04	1.323E-04
16	4.65E-4 - 2.15E-4	2.670E-04	1.709E-04	5.995E-05
17	2.15E-4 - 1.E-4	1.230E-04	7.867E-05	2.722E-05
18	1E-4 - 4.65E-5	5.726E-05	3.658E-05	1.253E-05
19	4.65E-5 - 2.15E-5	2.657E-05	1.696E-05	5.774E-06
20	2.15E-5 - 1.E-5	1.226E-05	7.826E-06	2.652E-06
21	1E-5 - 4.65E-6	5.713E-06	3.645E-06	1.231E-06
22	4.65E-6 - 2.15E-6	2.653E-06	1.692E-06	5.705E-07
23	2.15E-6 - 1.E-6	1.225E-06	7.813E-07	2.630E-07
24	1E-6 - 4.65E-7	5.709E-07	3.640E-07	1.224E-07
25	4.65E-7 - 2.15E-7	2.652E-07	1.691E-07	5.683E-08
26	2.53E-8	2.289E-07	1.460E-07	4.903E-08
Total		2.041E+06	1.842E+07	5.727E+03

Table C.20. Gamma source spectrum normalized to 1 and total intensity at 1 FA calculated by IPPE-K for storage time t=0 (photons/s)

N gr.	Energy boundaries, MeV	UO_2	MOX-W	MOX-R
1-9	11.0 - 0.75			
10	0.75 - 0.35	9.643E-05	6.837E-09	3.050E-10
11	0.35 - 0.15	1.172E-01	8.314E-06	3.709E-07
12	0.15 - 0.08	5.910E-02	4.191E-06	1.869E-07
13	0.08 - 0.04	1.083E-02	4.227E-02	1.816E-01
14	0.04 - 0.02	0.000E+00	2.775E-03	1.192E-02
15	0.02 - 0.01	8.128E-01	9.549E-01	8.065E-01
	Total	5.834E+09	3.933E+12	8.754E+13

Table C.21. Gamma source spectrum normalized to 1 and total intensity at 1 FA calculated by IPPE-K for storage time t=10 years (photons/s)

N gr.	Energy boundaries,	MOX-W	MOX-R	UO_2
5	11 - 4.5	0.	0.	0.
6	4.5 - 2.5	6.348E-07	1.643E-06	0.000E+00
7	2.5 - 1.75	3.945E-07	1.945E-08	2.422E-04
8	1.75 - 1.25	7.205E-07	2.118E-07	3.994E-04
9	1.25 - 0.75	9.642E-06	6.531E-07	5.870E-03
10	0.75 - 0.35	3.430E-06	3.490E-06	1.335E-03
11	0.35 - 0.15	3.882E-05	6.560E-05	8.318E-02
12	0.15 - 0.08	1.221E-04	1.406E-04	8.577E-02
13	0.08 - 0.04	1.303E-01	2.741E-01	3.220E-02
14	0.04 - 0.02	8.553E-03	1.799E-02	2.145E-02
15	0.02 - 0.01	8.609E-01	7.077E-01	7.696E-01
	Total	5.639E+12	2.179E+14	8.300E+09

APPENDIX D

CALCULATION RESULTS FOR TASK IIc: SHIELDING AND HEAT GENERATION STUDY FOR SPENT FUEL WITH A CASK

APPENDIX D

CALCULATION RESULTS FOR TASK IIc: SHIELDING AND HEAT GENERATION STUDY FOR SPENT FUEL WITH A CASK

D.1 The Desired Results

In this task a study of shielding and radioactive characteristics of a Cask with spent fuel at a transportation is performed.

It is assumed a model of a Cask for 12 FAs with spent fuel. The geometric specifications of the Cask given in Table A.6 and in Fig.A.4 of the Benchmark Description.

Before moving FAs with spent fuel in the Cask it is assumed a storing its in a pool storage just like that which was described in Task I.

For calculation of the spent fuel compositions a pin-cell irradiation is to be performed with a discharge burnup of 60 GWd/MTHM at an average power 166 W/cm. The pin-cell cylinder specifications are: $r_{1,fuel}$=0.386cm, $r_{2,clad}$=0.4582cm, $r_{3,mod}$=0.7015cm. The initial fuel compositions are given in Table A.2 of the Description. The composition of moderator is given in Table A.3. The operated temperatures should be used: T_{fuel}=1027K, T_{clad}=579K, T_{mod}=579K.

For each type of fuel should be calculated:

- Nuclide composition of actinides and fission products in spent fuel.
- Its activity.
- Dose rates at distance from the surface of the Cask equal to 0, 0.5, 1 and 2 meter.
- Heat generation for one FA total and fractionally for actinides and fission products in spent fuel via time of disposition 3 and 10 days, and 1, 3, 10 and 100 years.

D.2 Short Description of the Used Methods

Participated results:

Participants	**ID**
ABBN+WIMS/D4 +CARE + ANISN + ABBN-93	IPPE-K
ABBN+MAYAK+ ORIGEN + TWODANT + ABBN-93	IPPE-Z
ABBN+MAYAK+ORIGEN+ ANISN + CASK	IPPE-L

IPPE-K (A. Kotchetkov, G. Khohlov, G.Jerdev)

The spent fuel composition was calculated using ABBN-WIMS system using WIMS/D4 for neutronics calculations

The sources of neutron and gamma emission for the spent fuel composition but also the heat generation were computed with the code CARE.

The dose rates and transport calculations were performed with ANISN code. The CONSYST code with 26 neutron and 15 photon group ABBN-90 data set was used for calculations of mixture cross-sections and transferring data to the CCC-254/ANISN formats.

IPPE-Z (S. Zabrodskaia , G. Manturov, A.Tsiboulia)

Code system MAYAK allows to calculate neutron-physical characteristics of reactor system with account of changes of their isotopic composition during burnup process. In this particular case, the KENO-VI Monte-Carlo code was used for the neutronics calculations and the code ORIGEN-S used for calculation of the spent fuel composition taking into account the burnup of 60 GWd/MTHM at the average power 166 W/cm. The CONSYST code was used for 299 group mixture cross-section calculations in P_3 order of anisotropy approximation with group constants set ABBN-93.

Under the ORIGEN calculations all original ORIGEN libraries of neutron cross sections are replaced by (1) the calculated with the CONSYST code and (2) data for all other nuclides are taken from external ABBN libraries of fission products FP and actinides ACT. The library of masses is used too.

The sources of neutron and gamma emission and the heat generation for the spent fuel composition were computed with ORIGEN-S code. Under these calculations all needed for ORIGEN averaged cross-sections were calculated by the COCNSYST code with the ABBN-93 data set.

The dose rates and transport calculations were performed with TWODANT code in P_3 order of anisotropy approximation using group constants set ABBN-93 with 299 neutron and 15 photon groups. The CONSYST code was used for calculations of mixture cross-sections and transferring data to the CCC-547/TWODANT formats. Two types of calculations were performed: (1) 1-D calculations with infinite height of the Cask and (2) 2-D RZ calculations taking into account the real geometry of the Cask model.

IPPE-L (V. Levanov, A.Tsiboulia)

At the calculations of the radiation heating the actinides and fission products were taken into account. The heating from fission products calculated by formula**:**

$$Q = N \cdot (q(t_s, a, k) - q(t_{op} + t_s, a, k))\,[\mathrm{W}]$$

Function $q(t, a, k)$:

$$q(t, a, k) = \sum_{i=1}^{33} m_i(a, k) \cdot \exp(-n_i \cdot t)$$

N – operating power, W

t_s - cooling time, s

t_{op} - operating time, s

a - contribution of Pu into fission power

k - factor for Cs -134

The dose rates calculations near the container with displaced 12 irradiated FAs were carried out with the code ANISN using the constants system CASK**.**

D.3 Comparison of the Calculation Results

The participated results on the dose rates calculations and their comparison are given in Tables D.1-D.7.

Table D.1. UO_2 - Comparison of dose rates [μSv/h] calculated by different methods

Comparison Case UO2	**[IPPE-K]** **CARE+ ANISN, ABBN-90 26 N +15 G**	**[IPPE-M]** **ORIGEN+ TWODANT, ABBN-93 299 N + 15 G**		**[IPPE-L]** **ANISN, CASK 22 N + 18 G, using analytic expressions**
		2-D	**1-D**	
SOURCE:				
neutron	6.79E+8	5.47E+8	5.47E+8	533E+8
gamma	7.71000e+15	5.57E+15	5.57E+15	
DOSE RATES:				
12 FA in a CASK				
k-eff used	*0.18*	*0.18*	*0.18*	*0.3*
neutron	59	60	62	170
gamma	490	413	428	460
On surface of CASK	550	473	490	630
At distance 0.5 m	310	250	278	460
At distance 1.0 m	234	174	210	350
At distance 2.0 m	155	91	139	230

Table D.2. MOX WEAPON - Comparison of dose rates [μSv/h] calculated by different methods

Comparison Case MOX-R	[IPPE-K] CARE+ ANISN, ABBN-90 26 N +15 G	[IPPE-M] ORIGEN+ TWODANT, ABBN-93 299 N + 15 G		[IPPE-L] ANISN, CASK 22 N + 18 G, using analytic expressions
		2-D	**1-D**	
SOURCE				
neutron	1.89E+9	1.67E+9	1.65E+9	1.62E+9
gamma	1.06E+16	6.91+15	6.91+15	
DOSE RATES:				
12FA in a CASK				
k-eff used	*0.21*	*0.21*	*0.21*	*0.30*
neutron	175	202	177	500
gamma	875	973	1055	1060
On surface of CASK	1050	1175	1233	1560
At distance 0.5 m	587	600	688	1200
At distance 1.0 m	441	410	517	880
At distance 2.0 m	291	208	342	570

Table D.3. MOX REACTOR - Comparison of dose rates [μSv/h] calculated by different methods

Comparison Case MOX-W	[IPPE-K] CARE+ ANISN, ABBN-90 28 N +15 G	[IPPE-M] ORIGEN+ TWODANT, ABBN-93 299 N + 15 G		[IPPE-L] ANISN, CASK 22 N + 18 G, using analytic expressions
		2-D	**1-D**	
SOURCE				
neutron	5.54E+9	5.68E+9	5.68E+9	5.48E+9
gamma	1.03E+16	6.75+15	6.75+15	
DOSE RATES:				
12 FA in a CASK				
k-eff used	*0.26*	*0.26*	*0.26*	*0.30*
neutron	566	690	643	1700
gamma	2100	2810	2821	3160
On surface of CASK	2666	3500	3464	4860
At distance 0.5 m	1473	1752	1906	3600
At distance 1.0 m	1104	1173	1430	2700
At distance 2.0 m	729	587	944	1800

Table D.4. The masses of actinides in one irradiated FA(g) after 3 years cooling time UOX

Nuclide	IPPE-K	IPPE-Z,-L
U-232 *E-2	0.122	1.075
U-233 *E-3	0.872	3.605
U-234 *E+1	7.584	7.376
U-235 *E+3	2.181	2.549
U-236 *E+3	2.410	2.317
U-237 *E-5		2.108
U-238 *E+5	3.645	3.653
Np-237*E+2	3.149	3.065
Np-238*E-8		7.481
Np-239*E-5		9.914
Pu-236*E-4	8.476	75.910
Pu-238*E+2	2.867	1.383
Pu-239*E+3	2.500	2.579
Pu-240*E+3	1.176	1.284
Pu-241*E+2	6.569	6.943
Pu-242*E+2	4.589	4.429
Am-241*E+2	1.237	1.317
Am-242*E-6	5.028	4.809
Am-242m*E-1	4.181	3.726
Am243*E+2	1.360	1.149
Cm-242*E-1	1.092	1.142
Cm-243*E-1	3.216	3.170
Cm-244*E+1	6.073	4.737
Cm-245*E+0	4.929	2.975
Cm-246*E-1	1.372	5.745
Cm-247*E-3	3.582	9.459
Cm-248*E-4	5.841	8.118
Total	3.749E+05	3.760E+05

Table D.5. The masses of actinides in one irradiated FA (g) after 3 years cooling time MOX (weapon)

Nuclide	IPPE-K	IPPE-Z,-L
U-232 *E-3	0.428	3.750
U-233 *E-4	0.488	3.835
U-234 *E+0	5.831	5.982
U-235 *E+2	2.040	2.126
U-236 *E+2	1.110	1.105
U-237 *E-5		5.724
U-238 *E+5	3.998	3.993
Np-237*E+1	7.909	7.726
Np-238*E-7		3.771
Np-239*E-4		2.586
Pu-236*E-3	0.272	2.462
Pu-238*E+2	1.459	1.506
Pu-239*E+3	4.491	4.743
Pu-240*E+3	3.224	3.479
Pu-241*E+3	1.816	1.886
Pu-242*E+3	1.019	1.061
Am-241*E+2	3.821	3.995
Am-242*E-5	2.758	2.580
Am-242m*E+0	2.294	1.995
Am243*E+2	3.454	2.971
Cm-242*E-1	3.758	4.107
Cm-243*E+0	1.320	1.430
Cm-244*E+2	1.702	1.442
Cm-245*E+1	1.909	1.347
Cm-246*E+0	0.647	2.118
Cm-247*E-2	1.941	4.402
Cm-248*E-3	3.839	4.006
Total	4.118E+05	4.119E+05

Table D.6. The masses of actinides in one irradiated FA (g) after 3 years cooling time MOX (reactor)

Nuclide	IPPE-K	IPPE-Z,-L
U-232 *E-3	0.995	4.338
U-233 *E-4	2.252	7.599
U-234 *E+1	2.466	2.517
U-235 *E+2	2.672	2.771
U-236 *E+2	1.054	1.062
U-237 *E-5		8.988
U-238 *E+5	3.924	3.920
Np-237*E+1	8.404	7.640
Np-238*E-6		1.052
Np-239*E-4		6.265
Pu-236*E-3	0.4239	2.594
Pu-238*E+2	5.891	6.027
Pu-239*E+3	6.108	6.478
Pu-240*E+3	4.931	5.265
Pu-241*E+3	2.849	2.963
Pu-242*E+3	2.426	2.350
Am-241*E+2	6.881	7.183
Am-242*E-5	7.964	7.385
Am-242m*E+0	6.624	5.718
Am243*E+2	7.171	7.248
Cm-242*E-1	7.977	8.689
Cm-243*E+0	3.853	4.244
Cm-244*E+2	4.966	4.902
Cm-245*E+1	8.023	6.656
Cm-246*E+1	3.846	1.074
Cm-247*E-1	1.403	2.837
Cm-248*E-2	3.578	2.857
Total	4.118E+05	4.122E+05

Table D.7. Heat generation via cooling time for 1 irradiated FA, Wt

Fuel		IPPE results	3 day	10 day	1 year	3 year	10 year	100 year
MOX-W	Actin.	K	1.73E+4	5.84E+3	1.62E+3	6.50E+2	5.60E+2	2.93E+2
		Z	1.78E+4	7.11E+3	1.69E+3	6.34E+2	5.44E+2	3.16E+2
		L	5.75E+3	5.60E+3	1.68E+3	6.14E+2	5.18E+2	2.82E+2
	FP	K	5.81E+4	4.16E+4	7.12E+3	2.36E+3	5.44E+2	5.31E+1
		Z	6.50E+4	4.56E+4	8.46E+3	2.91E+3	6.40E+2	5.78E+1
		L	6.62E+4	4.54E+4	7.38E+3	2.46E+3	6.38E+2	6.59E+1
	SUM	K	7.54E+4	4.74E+4	8.74E+3	3.01E+3	1.10E+3	3.64E+2
		Z	8.28E+4	5.27E+4	1.01E+4	3.55E+3	1.18E+3	3.74E+2
		L	7.19E+4	5.10E+4	9.08E+3	3.08E+3	1.16E+3	3.48E+2
MOX-R	Actin.	K	2.27E+4	1.21E+4	3.98E+3	1.86E+3	1.50E+3	5.65E+2
		Z	2.37E+4	1.38E+4	4.26E+3	1.99E+3	1.64E+3	6.22E+2
		L	1.28E+4	1.26E+4	4.24E+3	1.94E+3	1.58E+3	5.82E+2
	FP	K	5.81E+4	4.19E+4	7.19E+3	2.35E+3	5.35E+2	5.29E+1
		Z	6.39E+4	4.45E+4	8.41E+3	2.88E+3	6.34E+2	5.72E+1
		L	6.62E+4	4.54E+4	7.38E+3	2.46E+3	6.38E+2	6.59E+1
	SUM	K	8.08E+4	5.40E+4	1.12E+4	4.21E+3	2.03E+3	6.18E+2
		Z	8.76E+4	5.88E+4	1.27E+4	4.87E+3	2.27E+3	6.79E+2
		L	7.90E+4	5.79E+4	1.16E+4	4.40E+3	2.21E+3	6.48E+2
UOX	Actin.	K	1.53E+4	2.63E+3	6.52E+2	3.64E+2	3.22E+2	1.62E+2
		Z	1.51E+4	3.58E+3	5.54E+2	2.59E+2	2.32E+2	1.38E+2
		L	1.68E+3	1.64E+3	5.52E+2	2.52E+2	2.20E+2	1.18E+2
	FP	K	5.26E+4	3.74E+4	5.37E+3	1.82E+3	5.25E+2	5.35E+1
		Z	6.29E+4	4.37E+4	6.91E+3	2.46E+3	6.65E+2	6.45E+1
		L	6.58E+4	4.58E+4	5.92E+3	1.99E+3	6.88E+2	7.36E+1
	SUM	K	6.80E+4	4.00E+4	6.02E+3	2.18E+3	8.48E+2	2.15E+2
		Z	7.80E+4	4.73E+4	7.46E+3	2.72E+3	8.97E+2	2.02E+2
		L	6.75E+4	4.74E+4	6.48E+3	2.25E+3	9.08E+2	1.93E+2

APPENDIX E

RESULTS FOR K_{eff} WITHOUT WATER POOL

APPENDIX E

RESULTS FOR K_{eff} WITHOUT WATER POOL

For the calculation of the k_{eff} for the dry (0 gm/cc of water) configuration, KENO-VI calculations were performed with the assemblies touching. That is, the 40 cm triangular pitch between assemblies was reduced so that the assemblies were adjacent. The resulting values of k_{eff} for the three types of fuel were as follows:

UOX - 0.6636 ; MOX-R - 0.7675 ; MOX-W - 0.7075

Note that these results agree well with some of the Russian data. Note that even though infinite arrays are modelled, the arrays are not infinite in the axial dimension (height is fixed). As the pitch between assemblies increases, the number of neutrons lost to axial leakage increase.

INTERNAL DISTRIBUTION

1. B. B. Bevard
2. S. M. Bowman
3. B. L. Broadhead
4. J. J. Carbajo
5–9. W. C. Carter
10. E. D. Collins
11. B. S. Cowell
12. R. L. Childs
13. M. D. DeHart
14. F. C. Difilippo
15. K. R. Elam
16. R. J. Ellis
17–21. M. B. Emmett
22. I. C. Gauld
23. J. C. Gehin
24. S. R. Greene
25. O. W. Hermann
26. R. Holdaway
27. D. F. Hollenbach
28. T. W. Horning
29. D. T. Ingersoll
30. M. J. Kania
31. M. A. Kuliasha
32. S. Ludwig
33. G. E. Michaels
34. D. L. Moses
35. B. D. Murphy
36–40. C. V. Parks
41. L. M. Petrie
42–46. R. T. Primm III
47. W. J. Reich
48. C. H. Shappert
49. C. C. Southmayd
50. J. C. Wagner
51. R. M. Westfall
52. G. L. Yoder, Jr.
53. Central Research Library
54. ORNL Laboratory Records–RC

EXTERNAL DISTRIBUTION

55. N. Abdurrahman, College of Engineering, Department of Mechanical Engineering, University of Texas, Austin, TX 78712
56. M. L. Adams, Department of Nuclear Engineering, Texas A&M University, Zachry 129, College Station, TX 77843
57. D. Alberstein, Los Alamos National Laboratory, MS-E502, P.O. Box 1663, Los Alamos, NM 87545
58. J. Baker, Office of Fissile Materials Disposition, U.S. Department of Energy, MD-3, 1000 Independence Avenue SW, Washington, DC 20585
59. M. S. Chatterton, U.S. Nuclear Regulatory Commission, Office of Nuclear Reactor Regulation, MS O10 B3, Washington, DC 20555-0001
60. K. Chidester, Los Alamos National Laboratory, MS-E502, P.O. Box 1663, Los Alamos, NM 87545

61. R. H. Clark, Duke Cogema Stone & Weber, 400 South Tyrone Street, WC-32G, P.O. Box 1004, Charlotte, NC 28202
62. W. Danker, U.S. Department of Energy, MD-3, 1000 Independence Avenue SW, Washington, DC 20585
63. D. Dziadosz, Innsbruck Technical Center, 5000 Dominion Blvd., Glen Allen, VA 23060
64. T. Gould, Lawrence Livermore National Laboratory, P.O. Box 808, MS-L186, Livermore, CA 94551
65. L. Holgate, Office of Fissile Materials Dispostion, U.S. Department of Energy, MD-1/2, 1000 Independence Avenue SW, Washington, DC 20585
66. N. Fletcher, Office of Fissile Materials Dispostion, U.S. Department of Energy, MD-3, 1000 Independence Avenue SW, Washington, DC 20585
67. L. Jardine, Lawrence Livermore National Laboratory, P.O. Box 808, MS-L166, Livermore, CA 94551
68. Dr. Alexander Kalashnikov, Institute of Physics and Power Engineering, 1 Bondarenko Square, Obninsk, Kaluga Region, Russia 249020
69. D. E. Klein, Associate Vice Chancellor for Special Engineering Programs, The University of Texas System, 210 West Sixth Street, Austin, TX 78701
70. S. Nesbit, Duke Cogema Stone & Weber, 400 South Tyrone Street, WC-32G, P.O. Box 1004, Charlotte, NC 28202
71. J. O. Nulton, Office of Fissile Materials Disposition, U.S. Department of Energy, MD-3, 1000 Independence Avenue SW, Washington, DC 20585

72–73. Office of Scientific and Technical Information, U.S. Department of Energy, P.O. Box 62, Oak Ridge, TN 37831

74. Office of the Assistant Manager for Energy Research and Development, Department of Energy, Oak Ridge Operations (DOE-ORO), P.O. Box 2008, Oak Ridge, TN 37831
75. S. L. Passman, Sandia National Laboratories, Suite 110, 950 L'Enfant Plaza, SW, Washington, DC 20024-2123
76. Dr. Alexander Pavlovitchev, Russian Research Center "Kurchatov Institute," Institute of Nuclear Reactors, VVER Division, VVER Physics Department, 123182, Kurchatov Square, 1, Moscow, Russia
77. K. L. Peddicord, Associate Vice Chancellor, Texas A&M University, 120 Zachry, College Station, TX 77843-3133
78. W. D. Reece, Texas A&M University, Department of Nuclear Engineering, Zachry 129, College Station, TX 77843-3133
79. U. Shoop, U.S. Nuclear Regulatory Commission, Office of Nuclear Reactor Regulation, MS O10 B3, Washington, DC 20555-0001